Box 218
V A-1

TM 12-259

WAR DEPARTMENT TECHNICAL MANUAL

RECORDS ADMINISTRATION

DISPOSITION OF RECORDS

NATIONAL ARCHIVES LIBRARY

NOV 16 1945

WAR DEPARTMENT • JULY 1945

UB
15
.U53
1945

WAR DEPARTMENT TECHNICAL MANUAL

TM 12-259

RECORDS ADMINISTRATION

DISPOSITION OF RECORDS

WAR DEPARTMENT • JULY 1945

United States Government Printing Office
Washington: 1945

WAR DEPARTMENT

WASHINGTON 25, D. C., 31 July 1945

TM 12-259, Records Administration: Disposition of Records, is published for the information and guidance of all concerned.

[AG 300.7 (24 Jan 45)]

BY ORDER OF THE SECRETARY OF WAR:

G. C. MARSHALL
Chief of Staff

OFFICIAL:
EDWARD F. WITSELL
Major General
Acting The Adjutant General

DISTRIBUTION:

Sec of War (2); Under Sec of War (2); Chief of Staff (2); Asst Chief of Staff (1); AAF (25); AGF (25); ASF (2); T of Opn (15); Base Comd (10); Island Comd (2); Def Comd (2); HD (2); Base Sec (2); AAF Comd (15); AGF Comd (5); Arm & Sv Bd (1); S Div ASF (1) except Office, TAG (200); Tech Sv (15); SvC (25); Class I Instl (Records Administrators & Records Officers (or Adjutants)) (5); Class II Instl (Records Administrators & Records Officers (or Adjutants)) (5); Class III Instl (Records Administrators & Records Officers (or Adjutants)) (5); Class IV Instl (Records Administrators & Records Officers (or Adjutants)) (5); Special Instl (Records Administrators & Records Officers (or Adjutants)) (1); ASF Dep (Ea Sec) (2); SvC Records Dep (Cont) (50); (Oversea) (25); AGF Repl Dep (5); AGF Sch (5); AGF Repl Tng C (5); D (2); R (2); SBn (2); AF (10); W (5); G (5).

Refer to FM 21-6 for explanation of distribution formula.

FOREWORD

Changes to this manual will be supplied on a page basis, and will be published as required. As change pages are received they will be inserted in their proper place, and the replaced pages destroyed.

Each page of the manual bears a date in its upper inside corner. This date is the date of the publication. Pages which represent changes will carry the date and number of the change.

Paragraphs are numbered consecutively throughout the entire manual. Paragraphs with decimal suffixes indicate added paragraphs. For example, a paragraph numbered 23.1 represents the first main paragraph following paragraph 23.

Pages are numbered consecutively throughout the book. If new pages are added within the book the added pages will carry alphabetical suffixes—A, B, C, etc. For example, if a new page is added between 101 and 102, the page will be numbered 101A. A second additional page in the same place would be numbered 101B, etc.

CONTENTS

	Paragraphs	Pages
CHAPTER 1. INTRODUCTION	1– 3	1
CHAPTER 2. DUTIES AND RESPONSIBILITIES	4– 8	3, 4
CHAPTER 3. RECORDS DISPOSITION SCHEDULES	9–15	5, 8, 9, 10
CHAPTER 4. RECORDS DEPOTS AND WAR DEPARTMENT RECORDS DEPOSITORIES.		
Section I. Objectives	16	12
II. Types and Purpose	17–19	12, 13
III. Packing and Shipping Procedures	20–21	15, 16
IV. Loan and Withdrawal of Transferred Files	22–23	18, 19
CHAPTER 5. RETIREMENT, SPECIAL HANDLING, AND DISPOSAL STANDARDS.		
Section I. General	24–28	20, 21, 22
II. Civilian Personnel	29–32	24, 25
III. Communications Operations	33	28
IV. Financial	34–36	29
V. Historical	37	31
VI. Legal Assistance	38–40	32
VII. Library Services	41–42	32
VIII. Mail and Files Activities	43–44	33
IX. Maintenance	45	33
X. Management and Control	46–47	34
XI. Medical, Dental, and Veterinary	48–50	34
XII. Military Personnel	51–52	37
XIII. Military Training	53–54	42
XIV. Motor Pool Operations	55–56	43
XV. Photographic Facilities	57–60	43, 44
XVI. Postal and Courier Service	61–62	44
XVII. Public Relations	63–64	45
XVIII. Publications, Reproduction, and Binding	65–66	45, 46

		Paragraphs	Pages
XIX.	Purchasing and Contracting	67–68	47
XX.	Quartermaster Facilities	69–70	49
XXI.	Rationing Operations	71–72	50
XXII.	Repairs and Utilities	73–75	51
XXIII.	Research and Development	76	53
XXIV.	Security and Intelligence	77–79	53
XXV.	Supply	80–81	54
XXVI.	Transportation	82–83	57

APPENDIX I. LOCATION AND ADDRESSES OF RECORDS DEPOTS AND DEPOSITORIES 59

II. ALLOCATIONS TO SERVICE COMMAND RECORDS DEPOTS 62

III. REFERENCES TO DIRECTIVES AND PUBLICATIONS 67

CHAPTER 1

INTRODUCTION

1. Purpose

a. The accumulation of masses of files not only reduces administrative efficiency by impeding the use of current files but decreases immeasurably the utility of records for legal or historical purposes. Therefore a comprehensive program for the retirement of noncurrent files and for the orderly disposal of valueless papers is essential. The general purposes of this program, which is an integral part of the War Department records administration program, are:

(1) To assure the protection of permanent records and to facilitate their use, and

(2) To provide for the orderly disposal in accordance with statutory requirements of all other files of all elements of the War Department and Army.

b. The objectives of this manual are to implement the War Department records administration program so far as it relates to the disposition of records by:

(1) Establishing the responsibilities of War Department agencies under the program. (See ch. 2.)

(2) Describing the purpose and technique of the preparation of records disposition schedules. (See ch. 3.)

(3) Explaining the function and scope of activity of records depots and War Department records depositories to which noncurrent files are retired. (See ch. 4.)

(4) Furnishing instructions for the retirement, special handling, or destruction of files of field units and installations. (See ch. 5.)

2. Scope

a. This manual and supplements authorized herein, constitute the basic authority for the disposition of noncurrent files of all elements of the War Department and the Army. Procedures for the handling or maintenance of current files are included only when necessary to an understanding of instructions relating to disposal or retirement.

b. The provisions of paragraph 25 defining the applicability of disposal standards contained in chapter 5 will be carefully observed.

3. Definitions

When used in this manual, the words or terms listed below will have the following meaning:

Current files. Files to which frequent reference is made in the conduct of current administrative work.

Disbandment. The discontinuance of a unit and the withdrawal of its designation from current records of the Army, or from current records of the major command having jurisdiction thereof. The expression "demobilize" is not used in this sense.

Discontinuance. The placing on an inactive or surplus status of an installation or activity within an installation in which all military functions have ceased.

Disposal. The elimination of files by destruction or salvage.

Disposal standard. The retention period established by the War Department and approved in accordance with statutory requirements governing the destruction or salvage of specified types of files being accumulated as a result of activities or functions common to more than one unit or installation of the military establishment. It applies both to clear and classified (security) files of the types described.

Disposition. Retirement of files, reduction of files by a microphotographic process, and elimination of files by destruction, salvage, or transfer to other than a War Department agency.

Files. The term files is used to include any papers, record or nonrecord, accumulated in filing equipment, boxes, or on shelves and occupying office or storage space.

Inactivated unit. A unit from which all personnel has been withdrawn, but whose designa-

tion is continued in the current records of the Army.

Inactive installation. An installation at which all activities except those necessary for protection of property, have ceased, but which again may be brought into operation by the War Department.

Installation. All posts, camps, stations, air bases, schools, and ground force agencies in continental United States (including both command and industrial installations) and comparable installations overseas, including intermediate headquarters below major subordinate command headquarters.

Major command headquarters. The headquarters of the three major subdivisions of the Army—Army Air Forces, Army Ground Forces, and Army Service Forces (excluding headquarters offices of chiefs of technical services)—and headquarters of oversea theaters and commands which report directly to the War Department.

Major subordinate command headquarters. The headquarters of Army Service Forces service commands and technical services; headquarters of functional commands and air forces directly responsible to the Commanding General, Army Air Forces; headquarters of ground force commands directly responsible to the Commanding General, Army Ground Forces; and comparable headquarters of oversea commands directly responsible to the commander in chief or commanding general of an oversea theater or command who reports directly to the War Department.

Noncurrent files. Files which are not required or are infrequently required in the conduct of current administrative work, including files of inactive or discontinued installations and inactivated or disbanded units. (See pars. 14 and 15.)

Nonrecord material. Papers and documents that can be disposed of without authorization from the Congress. For detailed explanation see paragraph 26.

Oversea theaters and commands. Theaters of operation, United States Army Forces, departments, base commands, and service commands, outside the continental United States.

Records. All books, papers, maps, photographs, or other documentary materials regardless of physical form or characteristics, made or received in pursuance of Federal Law or in connection with the transaction of public business and preserved or appropriate for preservation by that agency or its legitimate successor as evidence of the organization, function, policies, decisions, procedures, operations, or other activities of the Government or because of the informational value of data contained therein.

Records depot. An intermediate depository through which noncurrent files, other than certain classes of specialized files, are processed and in which they are administered pending either destruction or transfer to a permanent depository.

Retirement. Transfer of noncurrent files to a records depot or War Department records depository.

T/O unit. A unit regularly constituted and activated in accordance with a Table of Organization, Table of Organization and Equipment, or special Table of Organization and Equipment (AR 220-5) approved by the War Department for the type unit. When used in reference to units in the continental United States, the term is specifically defined to exclude certain types of units, described in appendix II, whose files are retired to ASF service command records depots rather than Organization Records Branch, AGO.

War Department offices. The Office of The Secretary of War, which includes the offices of the Secretary, the Under and Assistant Secretaries, and the Bureau of Public Relations; and the Office of the Chief of Staff, which includes the divisions of the War Department General and Special Staff.

War Department records depository. A specified depository used for the receipt of specialized classes of files. Files retired to such depositories are preponderantly of long-time or permanent value which, for technical or administrative reasons, require centralized facilities.

CHAPTER 2

DUTIES AND RESPONSIBILITIES

4. The Adjutant General

The Adjutant General is charged with full responsibility for staff supervision, coordination, and direction of the records administration program of the War Department and the Army. He directs such action and requires such reports in connection with the disposition of records as may be necessary for proper supervision of this activity.

5. Office of the Secretary of War and War Department General Staff

a. Records administrators are designated for the Office of the Secretary of War (to include the Offices of the Secretary, the Under and the Assistant Secretaries, and the Bureau of Public Relations) and for the Office, Chief of Staff (to include the War Department General and Special Staff Division) to be responsible for:

(1) The survey and evaluation of files of offices and divisions for which designated.

(2) The development of records disposition schedules to control the destruction and retirement of noncurrent files.

(3) Supervision of the elimination of nonrecords and records authorized for disposal prior to retirement of remaining noncurrent files.

(4) Submission of disposal schedules to The Adjutant General for information and for necessary action concerning records requiring Congressional approval prior to destruction.

(5) Reporting progress to The Adjutant General as specified in paragraph 28*b*.

b. Records officers may be designated in offices and divisions as required to accomplish the proper disposition of noncurrent files.

6. Major Commands

a. The Commanding Generals of Army Air Forces, Army Service Forces, and Army Ground Forces and of oversea theaters and commands reporting directly to the War Department, are responsible for all records disposition activities within their respective commands.

b. Records administrators are designated at headquarters of each major command in the zone of the interior and as required in oversea theaters, to be responsible for the following functions relating to the disposition of files:

(1) Staff supervision of the entire program within the command concerned, including the issuance of instructions necessary to the accomplishment of the program.

(2) Supervising the preparation of records disposition schedules to control the retirement and destruction of files of headquarters offices.

(3) Training and inspection of the work of records administrators and records officers designated at subordinate commands and installations.

(4) Directing the development and publication of such uniform standards governing the retirement of particular types of files of active units and installations as may be deemed essential.

(5) Review of disposal recommendations originating within the command and the initiation of such additional action as may be necessary to prepare for submission to The Adjutant General additional general disposal standards not already approved by the War Department.

(6) Development and, upon approval by The Adjutant General, publication in supplements to this manual of disposal standards to govern the destruction of files unique to the major command concerned. (The Chief of Engineers publishes disposal standards approved by The Adjutant General for files unique to civil works functions delegated to him by the Secretary of War.)

(7) Implementation when essential of disposal standards published in this manual by:

(*a*) Such clarification as may be necessary (in terms of specific documents) to accomplish the purposes of this manual.

(*b*) Development of lists of specific documents and papers falling within the approved categories of nonrecord material defined in paragraph 26.

(8) Facilitating at all times the close liaison essential between installations, offices, and activities, and depositories, in executing an orderly program of records retirement.

(9) Development of standing operating procedures for the disposition of files of discontinued installations and of installations changing status.

(10) Reporting progress of the disposition of files as specified in paragraph 28.

(11) Supervision of the operations of such records depots or depositories as may be assigned to the command concerned.

c. Twenty copies of all directives relating to the disposition of files will be forwarded immediately upon issuance to The Adjutant General (ATTENTION: Records Management Branch).

7. Major Subordinate Commands

a. Records administrators are designated at headquarters of major subordinate commands in the zone of the interior and as required in oversea theaters, and are charged with such functions listed in paragraph 6*b*, as may be directed by major force headquarters.

b. Records administrators at ASF service commands are particularly charged with establishing and maintaining liaison through appropriate channels between service command records depots and installations of Army Ground Forces, Army Service Forces, and Army Air Forces in order to provide for the systematic receipt and use of noncurrent files transferred to the depots.

8. Installations

a. Records officers are designated at all installations in the continental United States and at such installations or comparable organizations overseas as may be directed by the commanding generals of oversea theaters and commands. Subject to supervision through usual command channels, they are charged with responsibility for all files created and maintained by the installation or organization and in this respect they are responsible specifically for:

(1) Maintaining and keeping current the installation's records disposition schedule and installing filing procedures to make it effective.

(2) Prompt disposal of nonessential nonrecords and records authorized for immediate disposal in block upon becoming noncurrent.

(3) Segregating and disposing of specialized files authorized for centralization or special handling as provided for in chapter 5.

(4) Periodic inspection of files, preferably quarterly, to insure compliance with disposition instructions.

(5) Liaison with records depots and War Department records depositories to facilitate the use of files transferred thereto.

(6) Proper arrangement and packing of files as specified in paragraphs 20 and 21.

(7) Preparing lists and other data as directed by supervising headquarters prior to change of status of the installation. Whenever possible the following will be furnished to the service command or oversea records depot to which the noncurrent files of the installation are transferred:

(*a*) Organization charts showing the relationship of the offices in which files were accumulated to other offices in the headquarters or installation and to include all changes in organizational structure and distribution of functions which may have been made.

(*b*) A listing showing the disposition made of files transferred to War Department records depositories or transferred with an operating function to an active installation.

(8) Making recommendations through command channels for the scheduled disposal of files, other than nonrecord material.

(9) Assisting commanding officers of T/O units stationed at the installation in making proper disposition of their noncurrent files.

(10) Reporting progress as required by the appropriate headquarters.

(11) Such additional duties as may be required by higher headquarters.

CHAPTER 3

RECORDS DISPOSITION SCHEDULES

9. General

Records disposition schedules are the approved means of establishing systematic plans for the disposition of files. Schedules will be based upon approved disposition policies and will constitute continuing instructions for the retirement and destruction of files. Records administrators and records officers will utilize schedules as a means of administrative control to obtain compliance with approved policies.

10. Preparation of Schedules

a. Records disposition schedules will be prepared for each office, headquarters and installation in the continental United States and for such oversea headquarters and organizations as may be directed by the commanding generals of oversea theaters and commands. Schedules will cover all files and will utilize fully the disposal standards and other disposition instructions contained in chapter 5 or in authorized supplements to this manual.

b. Records disposition schedules will contain the following minimum information:

(1) Identification of the particular office accumulating the files.

(2) Precise description of each class or type of file. It is essential that this description be sufficiently clear and definite to avoid subsequent confusion as to the coverage intended. Individual documents or papers should not be identified unless such documents or papers are filed separately as an individual series. Decimal or other subject correspondence files will be identified as one type of file unless portions of such files should be destroyed or otherwise disposed of in block independently of the remainder of the file. These portions will be identified as a separate type of file.

(3) Disposition instructions for each type and class of files identified. For permanent records the instructions will indicate the period of time the particular type of file is to be held in the operating office prior to transfer to the appropriate records depot or depository. For files of temporary value the instructions will state the period of time that must elapse prior to destruction or other disposal. In cases where it is unnecessary that files of temporary value be held in operating offices during their entire period of retention, the instructions will indicate when retirement to the appropriate records depot is to be effected. The period of time after which files will be destroyed or retired may be stated as a fixed period, for example "1 year"; as an indefinite period which terminates with a specific event, for example "When the employee is separated from the service," "1 year after audit and clearance of pay roll," etc.; or as an alternative period of time, for example, "1 year or upon discontinuance of installation."

c. To expedite the preparation of records disposition schedules use of WD AGO Form R-5112, illustrated below, which may be reproduced locally as required, is recommended.

6 is blank

RECORDS DISPOSITION SCHEDULE FOR (Installation) *Camp Murphy, Fla.*	OFFICE Post Headquarters / UNIT Post Adjutant		SUBUNIT General Files / LOCATION Bldg. E., Rm. 10	DATE PREPARED	APPROVED BY
DESCRIPTION OF FILES (1)	Vol (file drawers) (2) NOW ON HAND	Vol (file drawers) (2) PER YEAR	DISPOSAL AUTHORITY (3)	DISPOSITION INSTRUCTIONS (4)	
1. Central Decimal File. 1942.	40	10	None	Cut-off after 1 year; hold 1 additional year; destroy disposable material and retire to SvC records depot.	
2. Publications: Record copies of General Orders, Special Orders, Numbered and Administrative Memoranda, General and Special Court Martial Orders, Daily Bulletins, and Camp Newspapers. 1942.	10	2	None	Screen semiannually; destroy disposable papers; retire noncurrent files of continuing value to SvC records depots when accumulated to the extent of two file drawers.	
3. Records of receipt of registered and insured mail. 1943.			4 years (par. 62*a*, TM 12-259).		
4. Message Facilities Records: Extra copies of incoming and outgoing telegrams and teletypes, and related papers. 1942.			6 months (par. 33*a*, TM 12-259).		
5. Surplus Copies of Publications of higher headquarters. 1942.			As superseded (par. 66*a*(1) TM 12-259).		

WD AGO Form R-5112
August 1945

INSTRUCTIONS FOR THE PREPARATION OF RECORDS DISPOSITION SCHEDULE

1. Separate sheets will be used for each administrative unit of the headquarters or installation which maintains files, properly identifying the unit and its location in the heading of the schedule.

2. "Description of Files" (col. 1). All files accumulated by the unit or subunit—papers, card records, photographic material, maps, charts, etc., will be listed. Each class or type of file which can be described and disposed of as a unit will be listed as one item regardless of quantity. Items will be grouped so far as practicable according to the functional categories used in chapter 5. Folder by folder or paper by paper listing will be avoided. Entries for items composed of duplicate or extra copy (nonrecord) papers will indicate the location of the record copies.

3. Volume (col. 2) will be indicated in terms of file drawers with volume accumulated to date and estimated annual rate of accumulation entered separately.

4. Disposal Authority (col. 3).

   a. Installations will cite the applicable disposal standard contained in this manual (or in authorized supplements thereto) for files which are to be destroyed. For nonrecord items the accepted category of such material will be cited. The word "none" will be entered for files believed to have sufficient value to warrant permanent or long-time retention. Where no disposal standard exists for records believed to be of temporary value, the phrase "To be obtained" will be entered in this column, and a recommendation for establishment of an approved disposal standard will be submitted through channels.

   b. Major Command and Major Subordinate Command Headquarters will enter the phrase "to be obtained" in this column for record items requiring Congressional approval prior to destruction. The Adjutant General will notify such headquarters when approval has been obtained. Entries for nonrecord or permanent items will be as indicated in *a* above.

5. Disposition instructions (col. 4) will indicate appropriate retirement or destruction periods and in addition will specify briefly the action necessary to accomplish retirement or destruction. Special attention will be given to "cut-off" procedures for large rapidly growing files. Slow growing files will ordinarily be screened for disposal material semiannually.

6. Draft schedules will be approved by the officer responsible for the activity which accumulates the files.

11. Submission of Schedules

a. One copy of each records disposition schedule prepared for War Department offices, major command headquarters, and major subordinate command headquarters will be submitted through channels to The Adjutant General for information and necessary action as to record items requiring Congressional approval prior to destruction. Records administrators will identify and describe record items in sufficient detail to permit an appraisal of their administrative, legal, and historical significance.

b. Each installation records disposition schedule will be submitted for review and approval as required by the major command records administrator. After approval one copy will be forwarded to the appropriate service command or oversea records depot.

12. Submission of Additional Disposal Standards

Based on the review of installation schedules, records administrators will be responsible for initiating recommendations for additional general disposal standards for classes of records not already included in this manual or in authorized supplements thereto. Recommendations will be submitted through channels to major command records administrators who will review and transmit them to The Adjutant General for final approval. Disposal standards will not be submitted piecemeal but will normally include all disposable files of a function or operation not already covered. Each recommen-

dation will include:

a. Description of the function or operation and of the types of papers accumulated thereby, grouped so far as practicable to conform with prevailing filing practices so that a specific retention period for a given type of file will allow destruction of the file as a unit.

b. A specific retention period for each type of file, together with an explanation of the precise purpose served by the file.

c. Reference to pertinent directives in publications relating to the function or operation concerned and to the files created thereby.

13. Evaluation of Records

a. The preparation of records disposition schedules requires that files be evaluated in terms of possible future utility to the War Department and the Federal Government. Only a relatively small proportion of the records created have value sufficient to justify their permanent preservation. It is imperative, however, that this nucleus of records of enduring value be identified and preserved.

b. Records worthy of preservation as a part of the permanent archives of each federal agency, as stated by the National Archives, are those reflecting: (1) the organization and administrative history of the agency; (2) the policies it followed and the reasons for their adoption; (3) its working methods; (4) its specific individual transactions so far as they established a legal status of any kind or as they may be presumed to have a general and continuing interest; (5) the general social, economic, or other conditions with which the agency dealt.

c. Records which establish a legal status, such as those relating to personnel, Government-owned real estate, criminal investigations, or contractual obligations (including both the procurement and sale of property) are generally readily identifiable. It is less easy, particularly for field installations and units, to identify the materials which may be of value under the broad categories specified in (1), (2), (3), and (5) in *b* above. Field installations and units normally will have few of such records, since policies are generally determined at major headquarters or by the War Department, and the activities of such field installations and units are reflected in correspondence and reports forwarded to these headquarters.

d. During wartime, however, when relatively broad discretion in policy and procedural matters is exercised at such headquarters as ASF service commands and AAF functional commands, and particularly in oversea headquarters which exercise broad discretion in command matters, the general files and the files of staff sections will contain correspondence, directives, staff studies, reports, and other materials not forwarded to the War Department, which warrant permanent preservation, after screening, as a record of the activities of the command. These files should be preserved with their own separate identity, in the arrangement in which they were maintained by the command. The advice of historical officers assigned to installations and units of the Army and to offices of the War Department will be utilized in evaluating records for permanent preservation.

e. Where doctrine and policies are likely to be developed with respect to organization, training, personnel, and matériel, such as at schools, training centers, research centers, proving grounds, arsenals, etc., both general files and staff section files will contain records of permanent value. Army Ground Force historians, for example, have found documents of particular interest under the following general subject headings in decimal files: Reports (normally 319.1), telephone calls (normally 311.3) inspections and investigations (333), conferences (337), strength (320.2), schools (352), training (353), and maneuvers (354.2). When the decision or policy is important, all types of papers which document it are important, including such normally nonessential papers as routing slips when containing informational comments, directives, or other notations.

f. War Department historical officers have in some instances found that office files of convenience or important reading files of staff elements or the commanding generals of major commands and major subordinate commands, together with policy books, or comparable reference and policy material maintained by these or any other headquarters organizations, are especially valuable for historical purposes. Policy books are compilations of basic directives from higher authority or outside agencies, and office orders created within the agency itself, which reflect policy and procedural decisions.

14. Determining When Files Become Noncurrent

The basic standards for determining when files

become noncurrent, that is, eligible for transfer to the appropriate records depot or War Department records depository, are, first, the type of use; second, the frequency of use; and third, the rate of accumulation, considered in the order named.

a. TYPE OF USE. No installation will maintain files solely for correspondence containing requests for information from the records, when the papers accumulated during the course of administrative action taken by the activity in the performance of its current mission have been completed and closed out. Requests for information based solely on records can be handled at records depots or special depositories.

Example: Requests for information relating to the service record of enlisted personnel separated from the service, or requests for clinical records of individuals discharged from hospitals. The files are current, in the first instance, so long as the individual is on active duty; in the second, so long as the patient is under treatment in the hospital. A further example is the file relating to the development of a particular item of ordnance matériel. This file is current so long as developmental action is being taken on the item.

b. FREQUENCY OF USE. After type of use has been considered, frequency of use is a determining criterion. New administrative action, reopening a case file which has been closed out, is likely to occur for all types of correspondence, procurement, fiscal, property, maintenance, and other administrative files. The frequency of such use, which generally requires temporary withdrawal of the file by the activity responsible for taking action, can be estimated or analyzed statistically, and a reasonable retirement period fixed. No arbitrary rule for all activities of the Army can be laid down, since local physical factors and communications facilities are influential factors, but the practice of some operating activities in retaining, in current status, administrative files beyond a reasonable likelihood of active use will be discouraged.

Example: Examples of a type of files frequently held too long in current status are central decimal correspondence files. Less than 2 percent of the searches made in such files are likely to require the use of papers more than 4 years old, even in very large headquarters files. For field installations files a 1-year cut-off, with retirement after 2 years in a current status, is generally ample.

c. RATE OF ACCUMULATION. It is neither economical nor efficient to transfer files to noncurrent storage a handful at a time. Common sense judgments are essential, and the rate of accumulation of a particular series of filed papers is a factor, along with type and frequency of use, to be taken into consideration. A group of logically-related filed papers or folders, which otherwise could be scheduled for retirement as a unit, may grow so slowly that the cost of frequent, individual handling is greater than the savings resulting from its retirement or destruction. These papers or folders should be held in current status either until the volume justifies retirement (if they cannot then be destroyed) or they should be described in more general terms with other filed material and a cut-off established for the file as a whole.

Example: Decimal correspondence files. While the papers under different subject headings will vary in the frequency of use, it is normally more efficient and economical to establish a cut-off for the whole file, based on declining frequency of use of papers anywhere in the file, than to handle each subject heading individually.

15. Disposition of Files of Installations Changing Status

a. With certain exceptions, the files of installations changing status are arbitrarily defined as "noncurrent," even though they may be active for a period of time following change of status. This applies both to installations being discontinued as well as to installations being transferred from one of the three major commands of the Army (AAF, AGF, ASF) to another, or, within these major commands, from one command to another. The exceptions noted are as follows:

(1) Files necessary to the operation and maintenance of the installation's physical plant and equipment will remain at the installation.

(2) Fiscal accounting files are considered current until all accounts are closed and unexpended balances involved are reported for withdrawal.

(3) Files essential to the administration of a continued activity which has been transferred from the installation being relinquished or discontinued to another headquarters or installation will be transferred to the latter, as directed by the headquarters having command jurisdic-

tion, but will be specifically limited to files needed to administer a transferred operating activity (excluding the activity of record-keeping itself).

b. When any unit, headquarters, or subdivision of a headquarters is reorganized, consolidated, or redesignated and personnel and equipment are transferred to a new command, files will be closed out as of the date of discontinuance of the former command and properly identified as the files of the discontinued unit or office.

(1) Files which are thus cut-off will be retained by the successor unit or office until inactive. If, during this period, active papers or individual files are withdrawn and incorporated in current files of the successor unit or office, appropriate cross reference will be left in the file from which the papers were withdrawn.

(2) With the exception of individual active papers, as provided above, files of such redesignated or reorganized units or offices will not be merged or interfiled with the records of any other unit or higher echelon, but will be maintained so as to preserve the administrative origin of the records. Specific exceptions to this rule will be authorized only by The Adjutant General.

(3) When inactive, the cut-off portion of the files will be transferred to the appropriate records depot.

CHAPTER 4

RECORDS DEPOTS AND WAR DEPARTMENT RECORDS DEPOSITORIES

Section I. OBJECTIVES

16. General

a. Records depots and War Department records depositories are established for the receipt, processing, housing, and administration of noncurrent files of the War Department and Army. Records depots and depositories provide adequate facilities to which noncurrent files can be retired on a continuing basis and in a systematic manner, and in which the bulk of noncurrent files can be reduced to the minimum required for long-time or permanent retention by the elimination of valueless files or by microfilming. Personnel of the depots and depositories provide service on and facilitate use of retained records by furnishing files or documents or supplying information from files, and when necessary make administrative determinations and complete administrative action in cases not requiring staff or headquarters decision.

b. Records depots and depositories are designed to relieve units, installations, and headquarters offices of the custodial responsibility for and the paper work incident to the administration of noncurrent files, and to effect increased efficiency in servicing current files. Likewise it is intended to secure the preservation of valuable records and make them available at all times; to minimize the problem of files disposition on demobilization; and to keep mobile units free of unnecessary impedimenta.

Section II. TYPES AND PURPOSE

17. Types of Depots and Depositories

a. To achieve the objectives stated above, records depots and depositories are established as follows:

(1) Records depots for the receipt of noncurrent files, other than the specialized classes of files referred to below. Record depots are intermediate depositories through which noncurrent files are processed and administered pending either destruction or transfer to a permanent depository.

(2) War Department Records Depositories for the receipt of specialized classes of noncurrent files which, for technical or administrative reasons, require centralized facilities.

b. The location and addresses of records depots and depositories are contained in appendix I.

18. Records Depots

a. SERVICE COMMAND RECORDS DEPOTS. (1) One records depot is established in each of the numbered service commands of the Army Service Forces to receive noncurrent files of headquarters of major subordinate commands, (except headquarters of the technical services, Army Service Forces) and of all zones of the interior installations. Additional service command records depots may be authorized only by The Adjutant General.

(2) Army Air Forces and Army Ground Forces major subordinate commands and installations retire noncurrent files to specified service command records depots on a functional rather than a geographic basis. (See App. II.) Headquarters of ASF service commands, all ASF installations, and all special installations will retire noncurrent files to service command records depots serving the geographical area in which located, except as provided in appendix II.

b. OVERSEA RECORDS DEPOTS. Records depots are established in each oversea theater and command, as directed by the commanding gen-

eral thereof, to receive and, so far as practicable, to process the noncurrent files of all elements under his command, and to ship such files at periodic intervals, to the Organization Records Branch, AGO. The depots will receive, on request, the noncurrent files of activities located in such theaters or commands, but not under the jurisdiction of the commanding generals thereof.

(1) Prior to any major movement within a theater, and at such other times as may be directed by the commanding general, T/O units will clear their files of papers authorized for disposal and other noncurrent files not needed for future action, pack the latter in accordance with paragraphs 20 and 21, and ship them to the appropriate oversea records depot.

(2) Upon readjustment and redeployment movements or inactivation or disbandment overseas, provisions of current readjustment regulations will be followed.

19. War Department Records Depositories

a. War Department Headquarters Files. (1) The Adjutant General is charged with responsibility for the custody and administration of noncurrent files of War Department offices, Headquarters, Army Air Forces, Headquarters, Army Ground Forces, Headquarters, Army Service Forces (including offices of chiefs of ASF technical services); integral elements of such headquarters located outside the geographical limits of the Military District of Washington, offices of the Military District of Washington, and installations under that command. Lists of headquarters elements located outside the Military District of Washington will be issued at appropriate intervals by The Adjutant General for the guidance of the headquarters concerned.

(2) Noncurrent files of these offices are retired to the War Department Records Branch, AGO, on the basis of records disposition schedules approved by The Adjutant General.

b. Personnel Files. The Adjutant General is responsible for the custody and administration of files of separated military and civilian personnel, which are centralized in the following depositories:

(1) Demobilized Personnel Records Branch, AGO, receives permanent records of separated officers and enlisted personnel, except that files of retired Regular Army Officers are maintained in Officers Branch, AGO, except for certain miscellaneous personnel records as indicated below.

(2) Discontinued Projects Branch, AGO, receives official 201, intelligence, and medical files of civilian personnel separated from the War Department or transferred to a duty station outside the United States.

c. Clinical Records. (1) Clinical records (WD MD Form 55-series), together with the Register Index, the outpatient index on WD MD Form 52a (Index Record of Patients), and allied documents forming part of the clinical files (such as board proceedings) of disbanded, inactivated, or abandoned military hospitals will be segregated from the balance of hospital files and forwarded to Demobilized Personnel Records Branch, AGO.

(2) Noncurrent clinical records of active hospitals will be centralized in the Clinical Records Branch, AGO, according to the procedures prescribed by WD Pamphlet 12-14. (Centralization, Maintenance and Servicing of Noncurrent Clinical Records).

d. Purchasing and Contracting Files. Certain procurement files of Army Air Forces and Army Service Forces are centralized in two depositories, in accordance with current directives of the Commanding Generals, Army Air Forces and Army Service Forces. In oversea theaters and commands, all procurement files are retired to the appropriate oversea records depots unless specific exception is made by The Adjutant General.

(1) Army Air Forces procurement files are centralized under the Air Technical Service Command.

(2) Army Service Forces procurement files are centralized in Contract Records Branch, AGO.

e. Disbursing Officers' Money Accounts. The Fiscal Director is responsible for the custody and administration of noncurrent files of all disbursing officers' retained money accounts, except such accounts relating to civil works funds.

f. Photographic Files. Photographic records are centralized as follows:

(1) Air Force air and ground still photography by Photographic Division, AC/AS Intelligence, Hqs, AAF.

(2) Air Force air and ground motion picture photography by Motion Pictures Services Division, AC/AS Intelligence, Hqs, AAF.

(3) All other still photography by the Army Pictorial Service, Office of the Chief Signal Officer.

(4) All other motion picture photography by the Signal Corps Photographic Center, Office of the Chief Signal Officer.

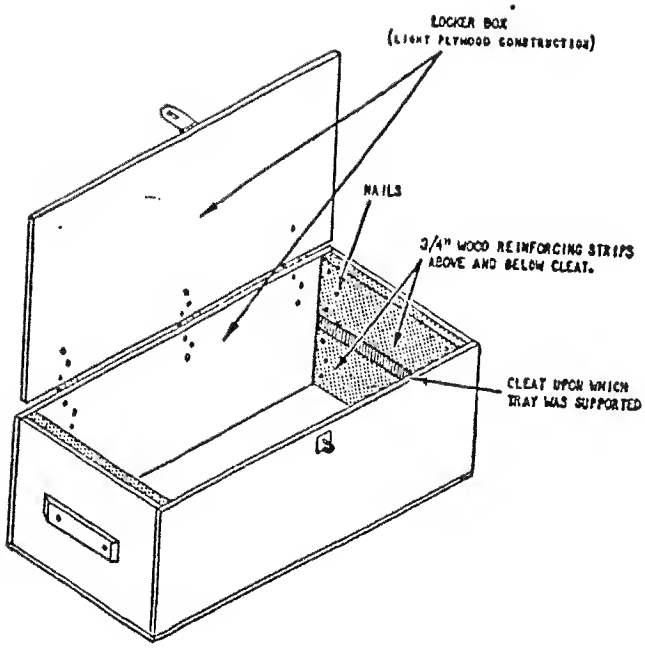

FIGURE 1.—Light plywood locker box showing required addition of reinforcing strips prior to records shipment.

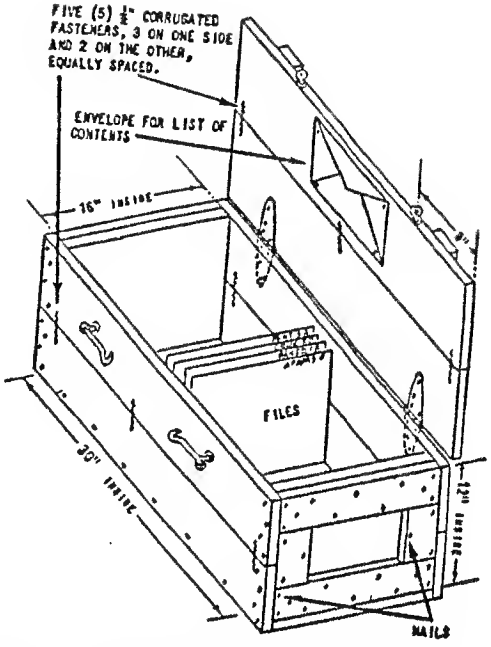

FIGURE 3.—Records shipping and storage box (packing position).

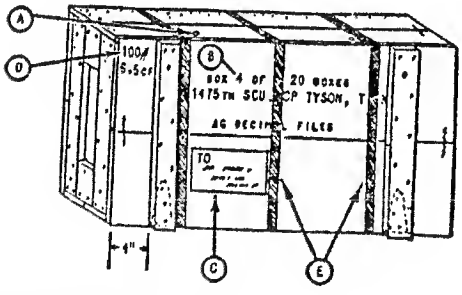

A. Remove hooks and eyes and place them inside the box prior to shipment.

B. Numbering and stenciling of boxes.

(1) Boxes are numbered in sequence starting with No. 1, clearly marked to identify the activity, office of origin, and general character of the contents.

(2) Numbering of boxes is consecutive for all boxes and is accomplished *after* all boxes are packed.

(3) Marking is such that it can be read on the lid when reading from the hinged side of the box.

C. Clearly indicate the name and address of the records depot to which the files are being shipped.

D. Indicate gross weight and cubic contents

E. Strapping of box for shipment—3 flat steel straps.

FIGURE 2.—Records shipping and storage box (preparation for shipment).

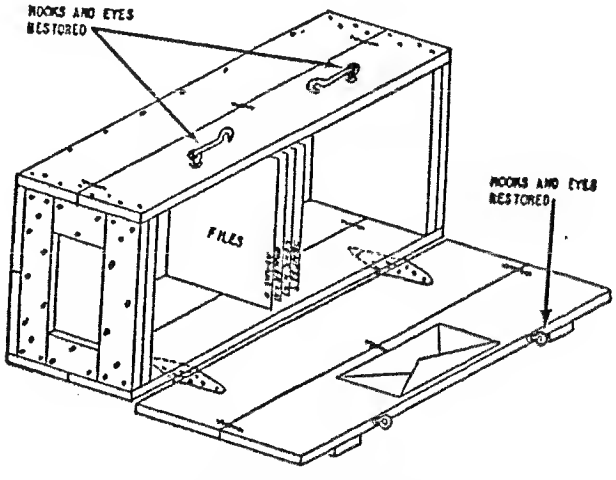

FIGURE 4.—Records shipping and storage box (showing position in which set up at the records depot).

g. T/O Unit and Oversea Theater Files. The Adjutant General is responsible for the custody and administration of all noncurrent files of T/O units and headquarters of defense commands within the continental United States and of noncurrent files of all units, installations, and headquarters organizations in oversea theaters and commands received from oversea records depots. These files are centralized in Organization Records Branch, AGO. (See App. II for description of certain types of units which are retired to ASF service command records depots.)

(1) Prior to movement oversea from continental United States, and at such other times as may be directed by the Commanding Generals, Army Ground Forces, Army Service Forces, and Army Air Forces, T/O units clear their files of papers authorized for disposal and other noncurrent files not needed for future action, pack the latter in accordance with paragraphs 20 and 21, and ship them direct to Organization Records Branch, AGO. The provisions of POM will be followed in determining files to be taken overseas.

(2) Trophies and other unit property will not be packed and shipped as records.

(3) Whenever a unit is inactivated or disbanded in continental United States, its Field Manuals, Technical Manuals, Graphic Training Aids, catalogs, books, blank forms, stationery, and other office equipment and supplies will be turned in locally for disposition as prescribed by the commanding officer of the installation at which inactivation or disbandment takes takes place, with a view to reissue or salvage. AAF activities will follow the procedure outlined in AAF regulation 5-9 in disposing of such material.

(4) Commanding officers of T/O units will inspect records prior to shipment, either in person or by a designated representative, to insure that instructions are followed.

h. Records Service Branch, AGO, receives certain miscellaneous records pertinent to military personnel, including original morning reports, sick reports, rosters, medical cards, and series of published orders, bulletins, circulars, and memoranda forwarded by specified commands to The Adjutant General in accordance with existing directives.

Section III. PACKING AND SHIPPING PROCEDURES

20. Standard Records Shipping and Storage Box

In order to facilitate storage and use of records in the containers in which they are shipped, a standard records shipping and storage box is prescribed for the shipment of files to service command records depots, oversea records depots, and War Department records depositories. Military and civilian personnel records forwarded to The Adjutant General in accordance with current regulations need not be shipped in such containers.

a. A quantity of wooden locker boxes suitable for records shipment and storage and surplus to stock level requirements, has been allocated to commanding generals of numbered ASF service commands and the Military District of Washington for use by all installations within the continental United States.

(1) Prior to the procurement of standard records boxes, records officers at installations within the United States will advise the appropriate ASF service command (ATTN: Records Administrator) of their records box requirements in order that available surplus stock thus allocated may be utilized until exhausted. In order to avoid unnecessary shipment of empty locker boxes, Army Air Forces and Army Ground Forces installations will requisition such boxes from the Army Service Forces service command in which they are located. Boxes will be requisitioned only for current needs and not for anticipated future requirements. Boxes will not be used for purposes other than shipment and storage of records.

(2) Locker boxes which are of light plywood construction will be reinforced by the use of ¾-inch wooden strips prior to the shipment of the records. The strips will be nailed to the inner surface of each end of the box, one strip above and one below the cleat upon which the locker box tray was supported. (See fig. 1.)

b. In order to meet requirements for a standard record shipping and storage box when locker boxes as described above are not available, the use of a standardized nailed wooden box is prescribed. The box will conform to the requirements of Specification JAN-P-106, Style 2, except that sides, top, bottom, and ends will be standard 25/32-inch lumber (S4S). Inside dimensions will be: length 30 inches; width 16 inches; depth 12 inches.

(1) *Cleats* will be not less than 25/32 x 2⅝ inches. All nails not clinched will be cement coated.

(2) *Cover* will be held together with five ½-

inch corrugated fasteners, two on one side and three on the other side, equally spaced, and two wooden cleats 25/32 x 5⅝ inches on outside of cover nailed 4 inches from either end of the cover. Nails holding cleats to cover will be clinched not less than ¼ inch on outside.

(3) *Hooks and eyes.* Boxes constructed for immediate shipment will not be fitted with hooks and eyes to fasten cover because of danger of damage in shipment. Boxes constructed for temporary retention at an installation may have hooks and eyes installed to facilitate local racking and search. However, hooks and eyes will be removed and placed in a list envelope prior to shipment. Hooks and eyes will be 3-inch *heavy* type.

(4) *Hinges.* The outside of the cover of the boxes will be fitted with two 4-inch heavy strap hinges, either bolted with 3/16 x 1 inch stove bolts or screwed to inside of lid with 1¼-inch No. 10 screws. Nuts will be on outside and bolt ends will be pinged to prevent loss of nuts in shipment. Washers will be used on both inside and outside of the box. Side of box will be mortised to ⅛-inch depth and hinges set in enough to permit tight fit of lid.

(5) *Strapping for shipping.* The box will be reinforced with three flat steel metal straps not less than ⅝ x .020 inch, one strap to be centered over top, sides, and bottom and the two other straps to be applied over top, sides, and bottom approximately ¼ the length of the box from each end.

(6) When files are transported by water, the box will be lined before packing with a prefabricated bag of waterproof barrier material conforming to specification AXS-1246, Type L-2 or M, and constructed as described in SB 38-2.

(7) *Applicable specifications.* The following specifications on the issue in effect on date of invitation for bids will form a part of this specification:

(*a*) *Federal specifications.*

QQ-S-781—Strapping, Flat, Steel.

QQ-S-790—Strapping, Round, Steel, Bare and Zinc Coated.

(*b*) *Quartermaster Corps tentative specifications.*

OQMG No. 106—Strapping Steel, Nailless Type (Flat and Round Steel Wire) for Boxes, Crates, and Bales.

OQMG No. 94—Specifications for Marking of Outside Shipping Containers by Contractors.

(*c*) *Ordnance Department U. S. Army tentative specifications.*

AXS-1246—Barriers, Waterproof (Materials for).

(*d*) *Joint Army-Navy specifications.*

JAN-P-106—Boxes, Wood, Nailed.

Notice. When Government drawings, specifications, or other data are used for any purpose other than in connection with a definitely related Government procurement operation, the United States Government thereby incurs no responsibility nor any obligation whatsoever, and the fact that the Government may have formulated, furnished, or in any way supplied the said drawings, specifications, or other data is not to be regarded by implication or otherwise as in any manner licensing the holder or any other person or corporation or conveying any rights or permission to manufacture, use, or sell any patented invention that may in any way be related thereto.

21. Packing Procedures

The file folders containing the records will be placed upright in the box, in filing order, with folders facing the left end of the box when the box is viewed from the hinged side. File tabs will be visible for easy access and identification. Exceptions will be made only when the peculiar size and shape of the material is such as to make the specified arrangement impractical.

a. Boxes will be filled only with one row of folders arranged as indicated above so that the records depot will be able readily to inspect, check, process, rack, search, and service records without having to provide additional boxes. All spaces between the files and the sides, ends, or cover of the box will be tightly packed with crumpled or wadded paper or other suitable packing material to avoid movement of contents during shipment. Additional file material or surplus file folders will not be used as packing material.

b. Files of large headquarters, offices, and installations will be packed for shipment in general classes, within which the filing sequence existing at the time records were in current files will be preserved. The following guide as to the sequence of general classes will be followed to the maximum extent practicable:

(1) Central decimal files.

(2) Decimal files for each branch or division (where decentralized offices of record exist).

(3) Funds (alphabetically by name).

(4) Property records (alphabetically by technical service).

(5) Orders file (record set issued by the headquarters whose files are being retired).

(*a*) General orders (arranged by year and numerically within each year).

(*b*) Special orders (arranged as for general orders).

(*c*) General court martial orders (same arrangement).

(*d*) Special court martial orders (same arrangement).

(*e*) Numbered memoranda, bulletins, circulars, general letters, etc. (same arrangement).

(*f*) Other memoranda, bulletins, circulars, general letters, etc. (arranged by date).

(6) Histories.

c. Unit files will be arranged in the following order prior to shipment:

(1) Decimal file or correspondence file (correspondence book and documents, if any).

(2) Morning Reports.

(3) Sick Reports.

(4) Duty rosters.

(5) Guard reports.

(6) Pay rolls.

(7) Council book, vouchers, and allied papers.

(8) Miscellaneous.

(9) Order file (record set issued by unit whose files are being retired arranged in same manner outlined in paragraph 21*b*(5).

(10) Histories.

(11) Journals, message files, and other combat records, not forwarded in accordance with AR 345-105.

d. Numbering and Stenciling of Boxes.

(1) Boxes are numbered in sequence starting with No. 1, clearly marked to identify the activity, office of origin, and general character of contents.

Examples

Box 1 of 60 boxes	*Box 5 of 60 boxes*
AAA Training Center	AAA Training Center
Camp Stewart, Ga.	Camp Stewart, Ga.
Orders	AG Decimal Files

(2) When packed in separate offices of an installation, boxes will be temporarily numbered in correct filing sequence. When the boxes are ready for shipment they will be assembled and numbered in over-all sequence, each box in relation to the entire shipment, that is, "Box 12 of 115 boxes," "Box 37 of 115 boxes."

(3) Stenciling will be placed so that it can be read on the lid when reading from the hinged side of the box.

e. List of Contents. (1) A list of the contents will be placed in an envelope affixed to the inside cover of the box. Duplicate lists will be fastened together in a consolidated list for all boxes in the shipment and will be forwarded immediately to the records depot or depository which is to receive the shipment. This list will be forwarded under a covering letter indicating anticipated date of shipment. It is imperative that the box numbers as indicated on the packing list correspond with the numbering of the boxes in the shipment.

(2) Such listings should adequately identify the contents of the boxes but should not attempt a paper-by-paper inventory. The following are illustrative of an adequate identification:

Box 1 of 60 boxes	*Box 5 of 60 boxes*
AAA Training Center	AAA Training Center
Camp Stewart, Ga.	Camp Stewart, Ga.
Orders—1944	AG DECIMAL FILES 1944
	000.3 Religion to
	000.91 Camouflage

f. Shipping. (1) Boxes will be shipped on a War Department Shipping Document which, under the heading "Description of Articles," will indicate the name of the organization, installation, or activity whose files are being shipped. *Example:* "Records of AAA Training Center, Camp Stewart, Ga."

(2) In preparing boxes for shipment, lids will be secured by metal strapping (not nailed or screwed) one strap to be centered over the top, sides, and bottom, and the other two straps to be applied over top, sides, and bottom approximately ⅙ the length of the box from each end.

(3) Each box will be stenciled clearly, indicating gross weight and cubic contents.

(4) Additional shipping instructions, including authorized date of shipment, identity of final carrier, etc., will be as prescribed by the affected ASF service command or oversea records depot, or War Department depository, except as follows:

(*a*) No implementing instructions are nec-

essary for the shipment of military and civilian personnel files as specified in chapter 5.

(*b*) T/O unit records in continental United States will be shipped without implementing instructions when the quantity does not exceed 150 boxes.

(5) Shipments of classified material will be governed by the provisions of paragraph 68, AR 380-5.

g. Packing and Transmitting Small Quantities of Files. (1) In Packing and transmitting small quantities of files insufficient to warrant the use of records boxes, the folders will be wrapped securely, using heavy envelopes or wrapping paper, and well sealed or firmly tied. The mailing address of the appropriate records depot or special depository will be clearly indicated, preferably by use of waterproof ink or typewritten mailing sticker.

(2) The most economical means of shipment which provides reasonably prompt delivery will be utilized. When the package weighs under 70 pounds advantage will be taken of postal regulations permitting shipment of records within the continental United States and to or from APO's by parcel post under Government frank. Packages in excess of 70 pounds will be shipped by express when the security or time elements are such as to require this means of transportation.

Section IV. LOAN AND WITHDRAWAL OF TRANSFERRED FILES

22. General

a. It is the policy of the War Department to facilitate official use of files transferred to records depots and War Department record depositories subject to such restrictions as are imposed by the War Department or the command creating and accumulating the files. Procedures for the loan and withdrawal of records are designed to permit immediate reference to files by the originating agency or a higher headquarters and at the same time to protect them against unwarranted and unauthorized usage.

b. Individual files or folders will be charged out on temporary loan to the originating agency or a higher headquarters whenever, in the judgment of the commanding officer of the depot or depository, the papers are not thereby subjected to unusual danger of loss or destruction, such as return overseas to an active combat zone. Where the need therefor is indicated, true copies or photostatic copies of documents will be furnished. Whenever possible, maximum use of information in transferred files will be made by referring correspondence to the depot or depository to which the files were transferred, for direct reply. When such action is specifically requested, depot replies to inquiries will be routed through the headquarters which created and transferred the files to depot custody. Space and facilities will be furnished to personnel of authorized activities of the War Department or Army visiting the depot or depository and utilizing files on the spot, for the compilation of approved studies or reports, or for extended historical or other research.

c. In the instances indicated in this subparagraph, specified installation or reorganization files may be withdrawn on indefinite loan upon application by the originating agency to the proper depot or special depository. Series of files so withdrawn generally will include only those retained records and reports which constitute a definitely identifiable "case" file or which can be readily segregated by date, such as retained rosters and pay rolls, and will cover a period generally of not more than 12 months. Correspondence filed under the War Department decimal system will not be withdrawn in bulk unless the volume is small and the date coverage within the period specified above, since such correspondence cannot be segregated readily on a date basis. However, specific items filed in a correspondence file may be withdrawn on temporary loan. Typical instances which may require the withdrawal of a file series include the following:

(1) When a unit which has been inactivated is again activated or when an inactive installation is returned to an active status.

(2) When projects previously abandoned or suspended are revived.

d. Under the provisions of AR 345-105, organizations, in order to facilitate the preparation of historical reports, to enhance unit esprit de corps, and to perpetuate its historical traditions, are required to maintain copies of unit histories. Originals of such histories, in all cases, will be forwarded in accordance with AR 345-105, but units will retain copies until

disbandment or inactivation, and will forward them with other retained files to the appropriate depot or depository.

Upon application to The Adjutant General specific data that may be of record in the War Department or information as to other sources from which the data may be obtained, will be furnished for the preparation of histories of organizations. Such applications should state the specific items with reference to which information is desired.

e. Procedures for the retirement to State custody of records accumulated by National Guard units prior to their entry into Federal service were established in accordance with instructions from the Adjutant Generals of the several States. Records of National Guard units pertaining to activity throughout their entire period of Federal service constitute War Department records. In common with all other War Department records, their disposal is governed by the provisions of Public Law 115, 78th Congress. This statute restricts the disposal of Federal records by transfer or otherwise to those deemed by the Archivist of the United States and Congress to be of insufficient value to warrant continued preservation by the Federal Government. Transfer of records to any State, dependency, appropriate educational institution, library, museum, historical research, patriotic or other qualified organization through other than the above procedure constitutes an illegal alienation of Federal records.

23. Personnel Records

a. Individual personnel files of separated military personnel transferred to Demobilized Personnel Records Branch are confidential and are loaned only to offices of the War Department and specified officers of Headquarters, AAF, ASF, and AGF, in accordance with current War Department directives. All inquiries other than from these offices are forwarded for reply by The Adjutant General.

b. Individual personnel files of separated civilian employees are forwarded to agencies of the Military Establishment under the conditions listed below. Installations will not request individual personnel files for the purpose of answering inquiries which cannot be answered from available files at the installation, but will forward inquiries for reply direct by Discontinued Projects Branch, AGO. Files will be returned:

(1) Upon reemployment by War Department agencies in the continental United States of a former War Department employee;

(2) Upon return of an employee from outside the continental United States, provided it is known or reasonable to believe an individual personnel file of the employee was forwarded to the Discontinued Projects Branch prior to the employee's departure from the continental United States or during the employee's oversea duty;

(3) When it is known or reasonable to believe that there exists a file in the Discontinued Projects Branch for War Department civilian personnel presently employed.

CHAPTER 5

RETIREMENT, SPECIAL HANDLING, AND DISPOSAL STANDARDS

Section I. GENERAL

24. Scope

a. The preparation of records disposition schedules and the establishment of records depots and depositories, described in previous chapters of this manual, constitute essential preliminaries for the systematic retirement, disposal, or other handling of noncurrent files.

b. This chapter contains instructions relating to the disposition of specified types of files which are common to more than one of the following command jurisdictions: Army Air Forces, Army Ground Forces, Army Service Forces, and oversea theaters and commands.

c. This chapter does not include instructions relating to files which are unique only to one of the command jurisdictions specified above. Such instructions will be issued by the command concerned in the form of supplements to this manual.

d. Subsequent sections of this chapter are arranged by the function to which the files relate.

(1) Each section indicates, as necessary:

(*a*) Files of long-time or permanent value;

(*b*) Specialized types of files which are retired to certain War Department records depositories;

(*c*) Files requiring specialized handling;

(*d*) And disposal standards for files of relatively short-time value, which upon becoming noncurrent are transferred to the appropriate records depot or depository and held pending destruction, or are destroyed at the installation immediately.

(2) Noncurrent files, other than those specialized types or for which special handling is required, will be retired as follows:

(*a*) War Department Headquarters Files to the War Department Records Branch, AGO;

(*b*) T/O Unit Files in continental United States to the Organization Records Branch, AGO; and

(*c*) All other files to the appropriate oversea or service command records depot.

e. All files of long-time or permanent value have not been identified. The absence of such identification, however, does not signify that there are no additional records that have sufficient value to warrant preservation. Records officers, therefore, will destroy only those files described under the appropriate disposal standard.

25. Applicability

a. Instructions contained in subsequent sections pertaining to retirement and special handling of files apply to all elements of the War Department and Army.

b. Disposal standards are applicable to files of all units, posts, camps, stations, and installations and intermediate headquarters below a major subordinate command. They are not applicable to War Department offices nor to the headquarters files of major commands and major subordinate commands as defined in paragraph 3, unless extended to headquarters files in supplements to this manual prepared at the direction of the commanding general of a major command and approved by The Adjutant General. (The term "headquarters files" is meant to include only those files growing out of headquarters functions rather than unit or installation functions performed at or for headquarters.) When applicability is extended, disposal standards will be utilized in preparing records disposition schedules governing headquarters files of major commands and major subordinate commands and submitted in accordance with paragraph 11*a*. Disposal of records under standards so utilized, as well as of nonrecords, will not be delayed pending approval on record items for which no disposal authority has been published.

c. Disposal authority, when applicable, ex-

tends to files of the types described which are now accumulating or which have accumulated, except that groups of files accumulated prior to 1920 which are still in existence will be reported at once, through channels, to The Adjutant General who will secure appropriate instructions as to their disposition from the Archivist of the United States.

d. The establishment of procedures to place approved disposal standards into effect is mandatory for all posts, camps, stations, and installations in the United States. Exceptions to an established disposal standard will be made only on written authority of The Adjutant General. Requests for such authority will be forwarded through channels.

e. Procedures to place approved disposal standards into effect in oversea commands will be established so far as practicable. When destruction of a particular class of files is contingent on an administrative action not required in an oversea command, the commanding general thereof will report such files to The Adjutant General, recommending an appropriate disposal standard.

f. Disposal standards are established for many types of records which may or may not be filed with the general decimal files of an installation. These standards are applicable regardless of the filing location of the material.

26. Nonrecord Materials

a. Nonrecord materials will be covered by the installation's records disposition schedule and will be destroyed or salvaged at the installation. In cases where nonrecord materials are included in the description of files for which a disposal standard has been established, such materials may be disposed of sooner than indicated by the specified retention period.

b. Accepted categories of nonrecord materials are as follows:

(1) Surplus copies of War Department and Army publications except that the following will not be defined as surplus:

(*a*) One record set of each series for the issuing headquarters;

(*b*) Record sets forwarded to The Adjutant General as directed by paragraph 17, AR 310-50.

(*c*) A copy of a publication upon which action is taken by a receiving headquarters and which therefore becomes an integral part of the files in the particular case involved and is filed and retired or destroyed with other papers in the case.

(*d*) Examples of War Department and Army publications are: Army Regulations, Technical Manuals, Field Manuals, Training Manuals, Technical Bulletins, Supply Bulletins, Tables of Organization, Tables of Allowances; published or processed orders, circulars, mimeographed memoranda, directives, and other processed documents; excess stock reports, reports of excess equipment, and similar reports; and post, camp, stations, or organization daily bulletins, daily information sheets, and similar documents.

(2) Publications of other Government agencies, commercial firms, or private institutions, and including catalogs, trade journals, and similar publications unless forming a part of a case upon which action has been taken.

(3) Extra copies of papers preserved only for convenience of reference. (See par. 13.)

(4) Papers of transitory value such as routine requests for information and publications, tracer letters, letters of transmittal, and letters directing the correction of records and reports which, after receipt or preparation or when action has been completed, can be discarded immediately or at the end of a brief suspense period (30 to 90 days) as being without record value and not needed for the conduct of future operations. Where transitory papers of this character have been filed with record material prior to the establishment of a definite suspense period for their retention, they will be removed from file as encountered and destroyed. Such papers thereafter will be maintained separately and destroyed periodically.

(5) Library and museum material acquired solely for purposes of reference or exhibition.

(6) Papers or cards used to facilitate or control work in progress, such as—

(*a*) Job control cards, work sheets, or work processing sheets; routing slips.

(*b*) Personal work papers, cards, and rough drafts.

(*c*) Statistical tabulating aids such as machine-punched cards.

(7) Copies of technical materials such as motion pictures, sound recordings, still photographs, maps, etc., if one or more copies identical both in content and in form of recording or reproduction are retained for purposes of record.

27. Sale, Destruction, or Transfer of Records Authorized for Disposal

a. In accordance with the regulations quoted below issued by the National Archives Council as required by section 2, Public Law 115, 78th Congress and approved by The President, records covered by an approved War Department disposal standard (or, for War Department offices and headquarters of major commands and major subordinate commands, records disposition schedules) will be —

"(1) Sold as waste paper, provided that, unless the said records shall have been treated in such a manner as to destroy their record content, any contract for sale of them will prohibit their resale as records or documents.

"(2) Destroyed, if they cannot advantageously be sold or if, in the opinion of a responsible officer, destruction is necessary to avoid disclosure of information that might be prejudicial to the interests of the Government or of individuals, or

"(3) Transferred, without cost to the United States Government to any State, dependency, or former dependency of the United States or to any appropriate educational institution, library, museum, or historical, research, or patriotic organization that has made application for them through the Archivist of the United States."

b. Attention is directed to the provisions of *a* (3) above. Before disposing of local records, the records officer will consider whether they may have historical or sentimental value to any organization of the character mentioned in the regulations. If so, he will notify The Adjutant General, through channels, describing the records and giving the name of an appropriate official of the organization concerned.

c. All papers bearing a higher classification than restricted, when approved for disposal, will be destroyed in the manner prescribed by AR 380-5. Other papers will also be destroyed whenever the quantity in any given lot is insufficient to justify a different method of disposition.

d. Nonrecord material, including photographic material, will be destroyed or sold as determined by a responsible officer.

28. Reporting

a. Major Subordinate Commands Headquarters and Installations. Major subordinate command record administrators (except Headquarters, ASF technical services who will report as required in *b* below) and installation records officers in the continental United States will prepare a quarterly report of files destroyed as of the last day of December, March, June, and September. These reports will be prepared at the installation and command headquarters where the files are destroyed, furnishing data required on forms substantially the same as the example below. The report form will be entitled "Report of Noncurrent Files Destroyed" (Reports Control Symbol XRM-161) and will be produced in the field on the typewriter as required.

Example:

REPORT OF NONCURRENT FILES DESTROYED

Reporting installation _____ Prepared by _____ Quarter ending _____

Item No.	Summary description of class of files destroyed	Volume (file drawer)	Basic authority
	(Sample entries)		
1	Surplus copies of publications—1940–1943.	6	Par. 66*a* (1) and (3), TM 12-259.
2	Reading files—1945.	3	Par. 26*a* (3), TM 12-259.
3	Post commissary sales officers accounts, vouchers, and related papers—1942.	4	Par. 70*d* (1), TM 12-259.
4	Informational military 201 papers—1945.	15	Par. 52*c*, TM 12-259.
5	Stock record account, vouchers, and related papers—1942.	15	Par. 81*d* (1), TM 12-259.
6	Memorandum receipt file—1945.	2	Par. 81*d* (2), TM 12-259.

WD AGO Form R

(1) The data prescribed for inclusion in the report form above is designed to assist records administrators in reviewing the application of approved disposal standards by subordinate headquarters. When, in the judgment of the major command headquarters, the submission of the report in the detail indicated becomes no longer necessary, they may authorize headquarters under their jurisdiction to omit the entries and show only the quantity of files disposed of, measured in terms of file drawers.

(2) For volume of material destroyed the unit of measure will be a legal or letter-size file drawer (1½ linear feet of files) computed to the nearest one-half drawer.

(3) These reports will be forwarded as prescribed by the records administrator of the appropriate major command who will forward to The Adjutant General (ATTENTION: Records Management Branch) consolidated statistics on the number of reporting installations and volume of files destroyed.

(4) The consolidated report will be forwarded in one copy so as to reach The Adjutant General not later than the 10th day following the end of the quarter.

b. WAR DEPARTMENT OFFICES AND MAJOR COMMAND HEADQUARTERS. Records administrators designated for War Department offices, for headquarters of Army Ground Forces and Army Air Forces, and for ASF staff divisions and technical services will prepare a quarterly report in the form indicated below for file destroyed by or to be retired from offices of the War Department or the immediate headquarters to which they are attached. This report will be prepared and forwarded to reach The Adjutant General (ATTENTION: Records Management Branch) simultaneously with the consolidated statistical report for field agencies required by *a*(3) above.

WD AGO Form R-5026
1 March 45

REPORT ON RECORDS DISPOSITION
(Reports Control Symbol XRM-186)

Name of agency	Prepared by	Quarter ending	Extension

Part I. Noncurrent files destroyed

Item No.	Summary description of class of files destroyed	Volume (file drawers)
	(Sample entries)	
1	Record Material	25
2	Nonrecord Material	75

Part II. Noncurrent files to be transferred to War Department Records Branch, AGO

Item No.	Description of files	Volume (file drawers)	Intended date of transfer
	(Sample entries)		
1	Purchase Action Reports regarding contracts prepared in QM depots, Jul. 1938–Dec. 1941. (U)	4	1 Oct. 1945
2	Procurement Authority Registers showing appropriation allocated to Army posts, camps, and stations, FY 1942. (C)	2	1 Oct. 1945
3	Protective Mobilization Plan, 1939, together with supporting annexes, tabulations, and directives, 1939–40. (C)	2	1 Oct. 1945
4	Reports of Sick and Wounded, WD MD Form 31, 1940. (U)	40	1 Oct. 1945

Section II. CIVILIAN PERSONNEL

29. Permanent Files

Civilian personnel records of the War Department and Army which are of long-time or permanent value constitute the following:

a. Individual personnel files indicated below which, under authority of current War Department directives, are forwarded concurrently with the employee throughout his period of service and upon separation therefrom are forwarded to the Discontinued Projects Branch, AGO.

(1) Official personnel 201 files, which consist of all documents affecting in any way the status of an individual employee throughout his period of service, except for those papers required to be maintained in other files.

(2) The individual intelligence files, consisting of classified documents which relate to character and loyalty investigations and reports on criminal or arrest cases as defined by current War Department directives, and other classified papers filed in the employee's intelligence file.

(3) Individual medical files which consist of documents maintained under the Army Industrial Program in accordance with existing War Department directives.

b. Minutes of committee meetings on civilian suggestions. When an installation is discontinued, the minutes of committee meetings on civilian suggestions will be forwarded to the Civilian Awards Board, Office of the Secretary of War.

c. PAY AND LEAVE FILES. (1) Individual Earnings Records and related recapitulations and summary controls which, under authority of current War Department directives, are forwarded to appropriate Army Regional Accounting Offices on or before 30 April following the close of each calendar year, or when an installation is discontinued.

(2) Documents contained in the Employee Pay Roll File—Employee's Income Tax Withholding Exemption Certificate, Statement of Civil Service Retirement Deductions Withheld, master leave record, and documents maintained in the Employee Pay Roll File which should have been filed in the official personnel 201 file. These documents will be withdrawn from the Employee Pay Roll File prior to the destruction of this file as provided in paragraph 32, and forwarded to the Discontinued Projects Branch, AGO.

(3) Retained copies of certifying officer pay rolls other than those maintained in conjunction with the Individual Earnings Records.

d. Wage Administration Program files of the War Department which include locality wage survey board files, job analysis records, ladder diagrams of job evaluations, approved requests for night shift differential rates, correspondence or other papers related thereto.

e. Other civilian personnel files of long-time or permanent value. Civil Service certificates or lists of eligibles; organization charts (one complete set) and position descriptions; correspondence files, the disposal of which is not authorized in paragraph 32; and files relating to the organization, planning, and evaluation of the civilian training programs.

30. Retirement of Pay Files

a. DISCONTINUED INSTALLATIONS. Pay files in the custody of certifying officers, such as Employee Pay Roll Files, retained copies of vouchers, and bond issuance schedules, are retired to the appropriate Army Regional Accounting Office, concurrently with the Individual Earnings Records and related summary controls, as directed by Civilian Personnel Regulations.

b. ACTIVE INSTALLATIONS. Pay files for a given year are current files until completion of audit of the pertinent files by the General Accounting Office. On completion of the audit and after elimination of such papers authorized for destruction in accordance with standards established by paragraph 32, the remaining pay files will be held by the installation pending issuance of further War Department instructions.

31. Handling of Personnel Files of Other Agencies or Organizations

a. The file of civilians (other than employees of the War Department and Army and persons rendering voluntary service to the War Department under the provisions of WD CP Circular 53, 1944) such as those of the individuals connected with the American Red Cross, United Service Organizations, camp shows, nonappropriated fund activities and comparable activities will be retained with the files of the unit

or installation which created and accumulated them, and will be retired with the latter to the appropriate service command or oversea records depots.

b. The files of Civil Service Local Labor and Rating Boards, exclusive of personnel files of War Department employees assigned thereto, are records of the United States Civil Service Commission, and disposition of such files will be in accordance with instructions of that agency.

32. Disposal Standards

a. General. Civilian personnel files of the War Department and Army of temporary value consists of certain files in the following groups: (1) administrative; (2) appointment and placement; (3) deferment; (4) employee relations; (5) pay and leave; (6) suggestions and awards; and (7) training.

b. Administrative. (1) Civilian Personnel Action Request (WD Form 72).

Destroy operating office copy upon completion of action.

(2) Position Record Card (WD Form 75 or 75A).

Destroy when position is reclassified or canceled.

(3) Service Record Card (WD Form 76 or 76A).

Destroy 6 years after transfer or separation of employee or when the installation is discontinued, whichever is sooner.

(4) Employee Record Card (WD Form 80 or 80A).

Destroy upon transfer or separation of employee.

(5) Request for War Department Civilian Employee's Record (WD Form 90).

Destroy upon receipt of record.

(6) Personnel Action Processing Control or Check Sheets which consist of cards or forms showing step by step processing of employee, lists of personnel actions processed, and similar papers used to control work in progress.

Destroy after 3 months.

(7) Prejudicial material which, upon completion of investigation, is unsupported by adequate evidence.

Destroy upon transfer or separation of employee from station at which investigation originated.

(8) Recurring Reports (retained copies) the disposition of which is not otherwise specified herein, such as: Daily Employees Development Report, Personnel Strength Report, Report on Consultants and Experts, Report of Current and Anticipated Employment.

Destroy after 1 year.

c. Appointment and Placement. (1) Rejected Applications for Employment (other than copies received from Civil Service Commission) including records accumulated on persons who were processed for employment, but failed to report to duty.

Destroy after 1 year or when installation is discontinued, whichever is sooner.

(2) Identification Files (Individual), such as requests for, authorizations, receipt and surrender of badges, photographs, or passes; lost or destroyed badges, photographs, or passes; and other similar papers, including card files.

Destroy upon transfer or separation of employee, or when the installation is discontinued, whichever is sooner.

(3) Letter of Inquiry Regarding Availability of Appointee or telegram used in lieu thereof and related papers.

Destroy 3 months after appointment of eligible. (If the eligible declines or is not appointed, destroy retained copies 3 months after the completed certificate or list of eligibles and related papers are returned to the Civil Service Commission.)

(4) Notice to employee of efficiency rating (retained copy). Inspection file.

Destroy when subsequent notice is placed in file or after separation of employee from the jurisdiction of the employing installation. Destroy entire file when the installation is discontinued.

(5) Notice to employee of efficiency rating (retained copy). Follow up file on fair and/or unsatisfactory efficiency ratings.

Destroy upon completion of action.

(6) Occupational skills lists, registers, and similar records.

Individual—destroy upon separation or transfer of employee. Other—destroy when obsolete or when installation is discontinued.

(7) Appointment and placement interview records.

Destroy upon transfer or separation of employee.

d. Deferment (Regional Deferment Committees). (1) Selective Service Deferment

Files, pertaining to individual employees, such as draft status cards, requests for deferments and action taken thereon, affidavit, occupational classification, and similar records.

Destroy 6 months after a case is closed, that is, when an employee is separated from service, transferred, a request for deferment expires and no additional request for deferment is made.

(2) Selective Service deferment records, other than records of individual employees, such as War Department Replacement Summary (List of Jobs-Selective Service Status of Workers), War Department Replacement List, War Department Replacement Schedule, and similar records.

Destroy after 6 months.

e. Employee Relations. (1) Recreational Reports, such as Monthly Recreational Statistical and Narrative Reports, report of funds and monies, reports of employee separations and allied papers.

Destroy 6 months after termination of war, or when the installation is discontinued, whichever is sooner.

(2) Monthly Report of Civilian Personnel Separations and Exit Interviews made for the purpose of analyzing causes for personnel turnover.

Destroy 6 months after termination of war, or when the installation is discontinued, whichever is sooner.

(3) Personnel Counselor's Periodic Interview Summary or Reports and allied papers, including Counselor's Summary Record.

Destroy after 2 years or when the installation is discontinued, whichever is sooner.

(4) Individual Counseling and Exit Interview Records. (These records are of a personal and confidential nature and are not to become a part of the employee's personnel 201 file.)

Destroy 6 months after transfer or separation of the employee, or upon discontinuance of the counseling office or installation, whichever is sooner.

(5) Group Hospitalization Records such as: Monthly Invoices, Report of Group Hospitalization Collections, Lists of New Applicants for Group Hospitalization, Group Hospitalization Receipt Slips, and similar papers.

Destroy after 1 year.

(6) Housing: All papers and documents maintained by civilian personnel offices pertaining to activities engaged in securing housing and rooming accommodations for personnel.

Destroy after 1 year, or when no longer needed for reference.

(7) Employee's Recreational Activity Card. Destroy upon transfer or separation of the employee.

(8) Processed publications, correspondence, indices and related papers pertaining to recreational activities, educational programs, health, Red Cross and similar activities, maintained for reference purposes.

Destroy on supersession, or when obsolete, or when the installation is discontinued, whichever is sooner.

f. Pay and Leave. The destruction of files relating to pay and leave, in many instances, is contingent on audit by the General Accounting Office. The files listed below have been approved for disposal by that office after the time periods specified. For files involved in General Accounting Office audit created prior to 1 January 1943, disbursing officers will furnish, on request of the civilian personnel certifying officers, information as to whether pertinent accounts have been audited and final settlement made of all exceptions. For files involved in the General Accounting Office audit after 1 January 1943, regional representatives of the Office of the Fiscal Director are instructed to notify civilian personnel certifying officers when the audit for a specified year has been completed and, also, of any formal exceptions taken thereto. Inquiries regarding the status of the audit will not be addressed to the Office of Regional Representatives. This information will be forwarded to the appropriate certifying officer when received from the Army Audit branches of the General Accounting Office. The following files are approved for disposal, exclusive of such documents when forming a part of a disbursing officer's accounts or specific documents when related to an unsettled claim.

(1) Transmittal letters for Individual Earnings Records.

Destroy after 1 year.

(2) Working papers used in the preparation of pay rolls such as control ledgers, work sheets, pay roll cards, and similar papers.

Destroy after 1 year, or when obsolete.

(3) Requests for authority to travel, travel orders, shipment of household goods and related papers, *excluding travel orders and related papers which also served as a personnel action.*

Destroy after 5 years.

(4) Job Cards prepared by manufacturing arsenals, depots, and similar installations, *except when used for leave purposes.*

Destroy after audit of pertinent Individual Earnings Records and/or pay roll records by the General Accounting Office, provided job cards which relate to a General Accounting Office exception will be retained until final settlement of the exception.

(5) Pay rolls and pay roll certifications (retained copies). WD Forms 44b and 44c which are prepared in conjunction with the Individual Earnings Records.

Destroy after audit of pertinent Individual Earnings Records by the General Accounting Office, provided retained copies of pay rolls and pay roll certifications which relate to a General Accounting Office exception will be retained until final settlement of the exception.

(6) Pay Roll Certification Control and related papers.

Destroy when retained copies of related pay rolls are destroyed.

(7) Public Voucher for Refunds (Memorandum Copies) and related papers.

Destroy after audit of pertinent Individual Earnings Records and/or pay roll records by the General Accounting Office, provided Public Voucher for Refunds which relate to a General Accounting-Office exception will be retained until final settlement of the exception.

(8) Voucher for Adjustments between Appropriations and/or Funds and related papers.

Destroy after audit of pertinent Individual Earnings Records by the General Accounting Office, provided Vouchers which relate to a General Accounting Office exception will be retained until final settlement of the exception.

(9) Pay Roll File (Employee), of civilian personnel who have transferred to the jurisdiction of another certifying officer or who have been separated from service, *except the following document: Employee's Income Tax Withholding Exemption Certificate, or Statements of Civil Service Retirement Deductions Withheld, master leave record, and documents which should have been maintained in the official personnel 201 file.*

Destroy after audit of pertinent Individual Earnings Records by the General Accounting Office provided each Employee Pay Roll File which relates to a General Accounting Office exception will be retained until settlement of the exception.

(10) Individual Earnings Records Summary Control and Summary Control Recapitulation (retained copies).

Destroy when retained copies of related pay rolls and pay roll certifications are destroyed.

(11) Pay Roll Adjustment Schedule and related papers.

Destroy when retained copies of related pay rolls are destroyed.

(12) Pay tables to supplement official Government salary tables.

Destroy when obsolete, provided one complete set will be retained until the Individual Earnings Records and/or pay roll records for the period during which the pay tables were in effect have been audited by the General Accounting Office.

(13) War Savings Bond Control and Recapitulation Bond Control.

Destroy 1 year after the bond account has been placed in balance with the Special Deposit Account of the Disbursing Officer concerned.

(14) Receipts for War Savings Bonds.

Destroy after 1 year.

(15) Reports, War Savings Bonds, such as Monthly Reports of War Bond Deductions, Report of Bond Purchases, Bond Participation Report, and similar reports.

Destroy after 2 years.

(16) Bond Issuance Schedule.

Destroy after the bond account has been placed in balance with the Special Deposit Account of the Disbursing Officer concerned.

(17) Public Voucher for Refunds of War Bond deductions (Memorandum Copy) and related papers.

Destroy after the bond account has been placed in balance with the Special Deposit Account of the Disbursing Officer concerned.

(18) Notice of Exceptions (Standard Form 1100).

Destroy after final settlement of exception.

(19) Return of Income Tax withheld on Wages (Form W-1 and earlier forms) and Reconciliation of Quarterly Returns of Income Tax Withheld on Wages (Form W-3 and earlier forms). (Retained copies.)

Destroy after 3 years.

(20) Schedule of Transfers—Special Deposits, relating to Deceased and Mentally Incompetent Personnel, and related papers.

Destroy after 5 years.

(21) All time and leave files, *except master leave records (Standard Form 70 or 70a or earlier forms used for the same purpose)*. Disposable time and leave files will include foremen's time reports, sign in and sign out reports, time cards, job cards on which leave data was maintained, and similar documents.

Destroy 2 years after closing the leave record or after completion of audit of the pertinent Individual Earnings Record and/or pay roll records by the General Accounting Office, whichever is later.

g. SUGGESTIONS AND AWARDS. (1) Summary Reports of civilian suggestions and awards.

Destroy after 1 year.

(2) Monthly consolidated reports of civilian and military suggestions, monetary and nonmonetary awards.

Destroy after 2 years or when the installation is discontinued, whichever is sooner.

(3) Employee's rejected and approved suggestions.

Destroy 5 years after final action on suggestion.

(4) Requisitions for civilian service emblems, *excluding copies maintained by the Quartermaster Depots.*

Destroy upon receipt of material requisitioned.

(5) Control or register of employee suggestions received.

Destroy after 5 years or when the installation is discontinued, whichever is sooner.

(6) Control Files for determining eligibility or award of civilian service emblems.

Destroy upon transfer or separation of employee, or when the installation is discontinued, whichever is sooner.

h. TRAINING. (1) Monthly, quarterly, or consolidated statistical and narrative reports of orientation, in-service, or preservice civilian training.

Destroy after 2 years.

(2) Classroom and instructors' records pertaining to civilian training, such as daily attendance records, classroom examinations, and other similar classroom working papers.

Destroy after 2 years or when the installation is discontinued, whichever is sooner.

(3) Visible index and locator files to individual civilian training progress and history card records.

Destroy on supersession, or when obsolete.

(4) Record of Training (WD Form 88) and similar records.

Destroy operating office copy after posting to Record of Training (WD Form 80).

Section III. COMMUNICATIONS OPERATIONS

33. Disposal Standards

a. Records relating directly to the operation of message centers, which transmit and receive telephonic, telegraphic, radio, and other messages, involving papers of the type: original sent messages and copies of received messages, *when record copies are maintained in other files;* relayed messages; service messages; message skeletons, commercial messages, *except those handled by the Alaska Communications System;* operator's number sheets; message registers, operator's logs; performance reports, interference and trouble reports; maintenance work orders; records of channel load; speed of service reports; frequency logs; urgent and operational priority logs; equipment service logs; daily load reports; record of multiple address and book messages handled; telephone toll tickets.

Destroy after 6 months.

b. Telephone, telegraph, and teletype accounts, including public vouchers, vendor's in-

voices, correspondence, supporting and relating papers.

Destroy after 3 years.

c. Telephone Work Order Files, including work orders, service orders, requests for service and changes, and comparable papers.

Destroy after 6 months.

Section IV. FINANCIAL

34. Definition

The term financial files covers all documents accumulated in budgeting, accounting, disbursing, collection, adjustment, and auditing activities for appropriated and nonappropriated funds, and including auditing and adjustment activities in connection with property accounts.

35. Permanent Files

a. Budget records, such as accounting records concerning the preparation and defense of budget estimates, including statistical and accounting analyses, correspondence, reports, and other papers relating thereto, and financial records, other than those specified below in this section, will be retained.

b. Disbursing and agent officer's retained money accounts will be centralized at one records depository in accordance with instructions issued by the Fiscal Director, Army Service Forces.

c. The centralization of financial records of long-time or permanent value which relate to procurement transactions will be as provided by paragraph 67.

d. Historical records (applicable to Army Exchange Funds only): records constituting evidence of the establishment of the exchange, exchange council books, evidence of liquidation or combination or any other major change in organization and operations including financial statements relating thereto, and records relating to the construction of buildings paid for out of exchange funds, including pertinent correspondence.

36. Disposal Standards

a. APPROPRIATED FUNDS FILES. (1) Control Accounting Records which concern the administration of suballocations of War Department funds, including: advices of suballocations and changes thereto; detail and summary accounts; reports, ledgers, journals, registers, reference devices, correspondence, analyses, reconciliations, and related papers pertaining to the disposition and use of suballocations—*except those records relating to lend-lease, reciprocal aid, and civilian supply transactions, and excepting class IV installations of the Office of the Fiscal Director, Army Service Forces.*

Destroy 2 years after lapse of appropriation: or in cases where the records are based on continuing appropriations (that is, those which are available for obligation until a designated purpose is accomplished without restrictions as to time), destroy 5 years after the date thereon.

(2) Control Accounting Records which concern the administration of allotments and suballotments of War Department funds, including: advice of allotments; procurement authorities; purchase authorizations and authorities to obligate, and changes thereto; detail and summary account, reports, ledgers, journals, registers, reference devices, correspondence, analyses, reconciliations, and related papers pertaining to the disposition and use of allotments, and similar instruments, *except those records relating to lend-lease, reciprocal aid, and civilian supply transactions, and excepting class IV installations of the Office of the Fiscal Director, Army Service Forces.*

Destroy 4 years after the fiscal year for which the allotments or similar instruments are available for obligation; or in cases where records are based on continuing appropriations (that is, those which are available for obligation until a designated purpose is accomplished without restriction as to time), destroy 5 years after the date thereon.

b. NONAPPROPRIATED FUNDS FILES. (1) Central Post Fund files and the records of funds comparable thereto, specifically Headquarters Funds, Unit Funds, Post Trust Funds, Post Communication Service Accounts, Special Welfare Funds, Officers' Mess Funds, Officers' Clubs, Aviation Cadet Messes, Aviation Cadet Clubs, Noncommissioned Officers' Clubs, Post

Mess Funds as defined in AR 210-60 and not individually listed herein, Sundry Funds as defined in AR 210-50 and not individually listed herein, Religious Funds, Post Restaurants as defined in AR 210-100, Post Civilian Welfare Funds, Hospital Subsistence Accounts, Camp Prisoner of War Funds, and Camp Morale Funds, *except records of the Army Emergency Relief Funds.*

(*a*) Accounting Records, such as general ledgers, accounts receivable ledgers, accounts payable ledgers, cash disbursement ledgers, pay roll journals, company council books, cash receipts and disbursement records, loan ledgers, control ledgers, property records, check registers, invoice registers, and warehouse journals —*except such records on the basis of which a civil claim, criminal action, or military disciplinary action has been initiated in connection with an entry or omission of an entry.*

Destroy 3 years after date of last audit involving such records.

(*b*) Supplementary Fund Records, such as financial statements; minutes of council, canceled checks, bank statements, and deposit slips; petty cash vouchers; insurance policies; vendor's vouchers; purchase orders; contracts; receiving reports; tally slips and delivery slips; audit certificates; inventories; personnel records; reports of Boards of Officers indicating action taken, and recommendations made by the commanding officer; carbon copies of checks; memorandum cash records; and pertinent correspondence relating to such records—*except such records on the basis of which a civil claim, criminal action, or military disciplinary action has been initiated in connection with an entry or omission of an entry.*

Destroy 3 years after date of last audit involving such records.

(*c*) Account Records and Supplementary Fund Records, as defined in (*a*) and (*b*) above, when such records constitute the basis for initiating a civil claim, criminal action, or military disciplinary action in connection with an entry or omission of an entry.

Destroy after the disposition of the claim, criminal action, or military disciplinary action, providing the applicable time period specified under (*a*) and (*b*) above, has lapsed.

(2) Army Exchange Fund Files, and Book Department Funds at Service Schools, and including Army Exchange Distribution Center records.

(*a*) Records relating to transactions with other Government agencies and employees, and nongovernmental organizations and individuals, such as general ledgers and journals, direct purchase journals, purchase journals, and all other books of original entry, accounts receivable ledgers, fixed assets records, investment records, insurance registers, accounts payable ledgers, purchase orders, manager's consolidated reports, petty cash vouchers, petty cash summaries, personnel earning records, personnel earning history cards, other personnel records, canceled checks, bank statements, vendor's invoices with attachments, customer's charge and credit slips, charge backs, personnel injury records; insurance policies; contracts and pertinent correspondence, concession contracts, demands for cash, garnishment demands, releases and quittances in controversial matters, and correspondence relating to taxation, claims, litigation, losses of funds or property and legal opinion—*except such records on the basis of which a civil claim, criminal action, or military disciplinary action has been initiated in connection with an entry or omission of an entry.*

Destroy after 6 years.

(*b*) Records relating to transactions within the Army, such as financial statements other than those indicated in paragraph 35*d*, certificates of inventory officers, reports of auditing officers, reports of Boards of Officers indicating action taken and recommendations by the commanding officer, and all official documents evidencing transactions which under the provisions of AR 210-65 require the approval of the commanding officer or the commanding general of the service command—*except such records on the basis of which a civil claim, criminal action, or military disciplinary action has been initiated in connection with an entry or omission of an entry.*

Destroy after 3 years.

(*c*) Records relating to internal operations, such as retail department's warehouse and transfer journals, cost department's warehouse and transfer journals, manager's daily reports, combination requisition and warehouse invoices, returned or transferred merchandise vouchers, clerk's reports, service station reports, branch manager's or cashier's reports, price change vouchers, consolidated summaries of inventory, inventory summaries, inventory

sheets, stock record cards, department cost percentage work sheets, branch departmental sales analysis, sales accountability records, receipts for coupon books issued in bulk, statements of enlisted men's notes and coupon books, requests for credit terms, copies of distribution of profit letters, carbon copies of checks, and memorandum cash records, and all other supplementary records and forms—*except such records on the basis of which a civil claim, criminal action, or military disciplinary action has been initiated in connection with an entry or omission of an entry.*

Destroy after 1 year; or destroy immediately at the time of liquidation, providing the fund has had a terminal audit and all discrepancies noted during such audit or previous audits have been satisfied.

(*d*) Records defined under (*a*), (*b*), and (*c*) above, when such records constitute the basis for initiating a civil claim, criminal action, or military disciplinary action in connecton with an entry or omission of an entry.

Destroy after the disposition of the claim, criminal action, or military disciplinary action, providing the applicable time periods specified under (*a*), (*b*), and (*c*) above, have elapsed.

(3) Army Motion Picture Service Files. (*a*) Standard Army Motion Picture Service Records, such as station notifications, weekly financial statements, film inspection reports, ticket cashier's daily report, assistant manager's reports, and correspondence concerning such routine matters as presentation of programs, cancelation of showings, film schedules, and condition of film.

Destroy 6 months after audit and clearance by or for the commanding general of the service command, or commanding general of the department and any other command outside the continental United States served by USAMPS.

(*b*) Local Bookkeeping Records, such as unnumbered bookkeeping forms used locally, including coupon book certificates, cash disbursement books, control of cash receipts, coupon book control accounts, reconciliations of cash, and shuttle service vouchers.

Destroy 6 months after audit and clearance by or for the commanding general of the service command, or commanding general of the department and any other command outside the continental United States served by USAMPS.

c. Property Auditors Files, consisting of such papers as copies of certificates of audit, working papers, and copies of shipping documents, receiving reports, purchase orders, and similar documents.

Destroy 1 year after clearance of the accounts to which the files pertain.

d. Report of Survey Files, consisting of reviewed reports of survey, records of action taken, *except such of the foregoing that pertains to lend-lease, reciprocal aid, and civilian supply;* pertinent correspondence, follow-up systems, control and reference devices, reports, copies of Boards of Officers' proceedings involved in property settlements, and other papers pertinent thereto.

Destroy 3 years after clearance has been issued.

e. Audit Certificate Files, consisting of retained copies of audit certificates, records of action taken in clearing discrepancies, pertinent correspondence, follow-up systems, control and reference devices, reports, copies of Boards of Officers' proceedings involved in audit matters and other papers which relate to audits conducted by the office or reported to the office (for example, military property, commissaries, civilian pay rolls, etc), *except those files relating to the audit of contract property accounts.*

Destroy 3 years after clearance has been issued.

Section V. HISTORICAL

37. Permanent Files

a. The files of historical offices and officers which are of long-time or permanent value consist of retained copies of historical studies and reports; administrative files, including correspondence of the historical office or officer; and records which have been collected or maintained as source material, such as: transcripts of interviews; journals or diaries kept by the historical office or officer; maps, charts, and statistical or other compilations prepared by the historical office or officer; special collections of

copies of policy directives and correspondence of exceptional importance; clippings and photographs.

b. Documents will not be removed from their proper files for inclusion in or the creation of a special "historical file," or for attachment to historical studies or reports. Copies of documents of exceptional importance may be made for these purposes.

Section VI. LEGAL ASSISTANCE

38. Definition

Files accumulated in the operation of the Legal Assistance Service constitute documents relating to the furnishing of legal advice and assistance to military personnel and their dependents, and, although rendered by or through the Army, pertain to personal legal problems.

39. Special Handling of Files

Documents contained in case files, such as original or executed copies of wills, powers of attorney, deeds, mortgages, and other legal instruments and original correspondence maintained in legal assistance offices, while not of primary or permanent interest to the Army, may be of personal value to the individual on whose behalf they were prepared, received, or held by the legal assistance office. The disposition of such papers will be in a manner consistent with the attorney and client relationship, and in accordance with pertinent War Department directives, providing that the case files pertaining to persons consulting a legal assistance office will be treated as "confidential and privileged" in a legal sense. Any papers which the legal assistance officer considers important or valuable to the individual and which have served the purpose for which the legal assistance officer obtained custody, will be delivered to such individual or to others at his direction, or if this is not possible, will be disposed of as the legal assistance officer may deem proper in particular instances. A record of the disposition made of such papers will be placed in each case file. If none of the foregoing methods of disposition are possible, the case files containing such papers, when forwarded to a records depot upon inactivation of legal assistance office, will be marked "Privileged Personal Case Files" and the contents of such case files so marked will not be revealed to anyone except upon the authorization of the service command judge advocate.

40. Disposal Standards

a. Correspondence and memoranda *except legal assistance materials received from the Office of the Judge Advocate General and other than papers identified as permanent material above;* opinions, and copies of legal instruments prepared or received in legal assistance offices, and pertaining to the personal affairs of military personnel or their dependents, which have served their purpose and have no continuing or permanent value.

Destroy 2 years after the case or matter has been finally completed.

b. Copies of reports rendered by legal assistance offices to higher headquarters, having no continuing value.

Destroy after 1 year, or upon discontinuance of the office.

Section VII. LIBRARY SERVICES

41. Permanent Files

Control records retained by libraries as finding aids or guides, or for operational purposes, constitute a type of record distinct in many respects from control records used for other operational purposes. Card indexes, accession records, or similar controls to volumes or documents will, normally, be retained throughout the life of a library.

42. Disposal Standards

a. Library Control Files, when not constituting finding media or accession controls essential to the operations of a library, including papers of the type: periodical circulation card files, loan cards for unclassified publications, and card files of magazines received.

Destroy on supersession, or when obsolete.

b. Library reports.

Destroy after 3 years.

Section VIII. MAIL AND FILES ACTIVITIES

43. Permanent Files

Correspondence files (decimal, subject, numerical, or similar types) at headquarters offices, or of major units thereof, frequently contain papers of research value and should be retained permanently. Papers of this type can be defined, in general terms, as recommendations on policies, indications as to progress and performance, and planning and procedural matters. and include papers of the type: record copies of directives, regulations, or other processed issuances; surveys and reports of operations and procedures; correspondence, studies, reports, and charts and graphs on organizational structure, functions and operations, and procedures; and correspondence and memoranda relating to or constituting background papers to such studies and reports. Other types of correspondence of permanent value consist of those dealing with significant relationships between the Army and other Government agencies or private firms and individuals. Disposal authority as specifically indicated in this chapter, however, will be construed as applicable to the types of files specified, whether or not filed under the decimal system.

44. Disposal Standards

a. Mail Control Records, such as routing and suspense slips, delivery receipts, logs of incoming and outgoing mail, records of messenger trips, *except records of delivery of registered and insured mail, and receipts for classified documents.*

Destroy after 3 months.

b. Mailing Lists and Addresses.

Destroy on supersession, or when obsolete.

c. Classified Document Receipts, which reflect the issue and acknowledgement of receipt of classified documents, such as WD AGO Form 996 and similar forms.

Destroy after 2 years.

d. Postage Stamp and Meter Records, including issue slips, vouchers, and inventories.

Destroy after the audit and clearance of related property account.

e. Registered document receipts, which reflect the issuance of semiannual or transfer report of registered documents (or devices) such as WD Form 34 and similar forms.

Destroy when the accountability is no longer required.

(*See also* pars. 61 and 62.)

Section IX. MAINTENANCE

45. Disposal Standards

a. Repair Shop Job Order File, consisting of work requests and job orders, job orders file envelopes, transfer memoranda, rejection memoranda, property issue slips, property turn-in slips, labor time tickets, and related papers, including job order registers (WD AGO Forms 811, 811-1, 827, 829, 447, and 828; WD QMC Forms 502 and 506; and similar forms), *exclusive of: (a) such records of maintenance performed in connection with contracts; (b) post engineer job order files; (c) maintenance records of installations of the Army Air Forces and Chief of Transportation, other than for vehicular and signal equipment.*

Destroy after 1 year.

b. Maintenance Reports, made in connection with the maintenance and repair of equipment and of maintenance shop operations, and papers related thereto, *excluding such reports in connection with maintenance operations of post engineers, and of installations of the Office of the Chief of Transportation and the Army Air Forces.*

Destroy after 1 year.

c. Property Accounting Records relating to repair shop supply, consisting of stock record cards, property turn-in slips, property issue slips, and other papers as set forth in AR 35-6700, which are either a section of the accountable officers' stock record account or are subsidiary thereto (*but excluding contract property accounting records as defined in AR 35-6700*).

Destroy 2 years after audit and clearance of accountable officers' stock record account.

d. Shop Locator, Inventory, or Identification Cards, Sheets, or Tags.

Destroy on supersession, or when obsolete, whichever is applicable.

(*See also* pars. 55 and 56.)

Section X. MANAGEMENT AND CONTROL

46. Permanent Files

Records that will be retained consist of special surveys and studies on administrative and organizational policies and procedures; work simplification surveys and studies; functional files of local forms, with supporting papers, maintained for purposes of forms control and standardization; and organization and function charts, maps, and tables.

47. Disposal Standards

a. Organization and function charts, maps, and tables, *except for one record set for the issuing office.*

Destroy as superseded, or upon discontinuance of activity, whichever is sooner.

b. Work simplification, personnel control, forms control and standardization, and similar periodic control reports.

Destroy after 2 years, or upon discontinuance of activity, whichever is sooner.

c. Records maintained for purpose of exercising control over submission of recurring reports.

Destroy when report is discontinued, or upon discontinuance of activity, whichever is sooner.

d. Records accumulated in the conduct of the records administration program such as, quarterly reports of records destroyed, records disposition schedules, indices for control purposes, publications, work sheets, records depot progress reports, retained copies of notice of records received and shipped.

Destroy after 2 years, as superseded, or on discontinuance of activity, whichever, is sooner, except that current records disposition schedules of an installation to be discontinued will be forwarded to appropriate records depot with the records of the installation.

Section XI. MEDICAL, DENTAL, AND VETERINARY

48. Permanent Files

a. Medical records of permanent value retired, when noncurrent, to appropriate service command records depots, oversea records depots, or Organization Records Branch, AGO, as applicable, constitute field medical records as defined in AR 40-1025; monthly report of venereal disease; monthly sanitary report; monthly and yearly reports of out-patient and in-patient consultations; eye, ear, nose, and throat examinations; register cards (WD AGO Form 8-24, or similar forms); reports of death (WD AGO Form 52 and similar forms); blood donor records; files of experimental and research work and individual records of subjects participating therein; biopsy and autopsy reports on pathological examination of tissue; autopsy protocols; historical record of stock culture collection; and subject and correspondence files.

b. Clinical Files. All official forms or charts, or papers used in lieu thereof, on which are kept the medical and surgical histories of patients admitted to military hospitals, including allied documents filed therewith, as disposition board, retirement board, line of duty board, CDD board proceedings, together with related indexes and registers, constitute the basic clinical files of permanent value. Military hospitals will transfer existing and future accumulations of noncurrent clinical records to Clinical Records Branch, AGO, in accordance with the provisions of War Department Pamphlet 12-14 (Centralization, Maintenance and Servicing of Noncurrent Clinical Records).

49. Files Specially Handled—Exposed Medical X-ray Films

a. The disposition of exposed medical X-ray films by active Army medical installations, including hospitals, dispensaries, and induction stations will follow procedures prescribed in current directives.

b. When a hospital is closed exposed X-ray films remaining in its possession (that is, other than those categories prescribed for special handling (*a* above)) and considered to be of unusual scientific or historical interest will be indexed and transferred to the appropriate records depot. All other films will be discarded for salvage.

50. Disposal Standards

a. General. The disposal standards established below are applicable to hospitals, dis-

pensaries, medical laboratories, and comparable activities at other installations, *but exclusive of records which form a part of the clinical record of an individual, and in the case of documents and reports required to be submitted to Headquarters, Army Air Forces or Army Service Forces, disposal authority is limited to the retained copies thereof.*

b. ADMINISTRATIVE. (1) Accident report, weekly (letter form).

Destroy after 1 year.

(2) Admission and disposition sheets, control sheets, clearing reports.

Destroy after 1 year.

(3) Monthly report of clinics.

Destroy after 1 year.

(4) Communicable disease report.

Destroy after 10 years.

(5) Dispensary reports (daily, weekly, monthly), except when including rosters of patients.

Destroy after 1 year.

(6) Individual injury report on military personnel (WD AGO Form 507 or similar forms).

Destroy after 1 year.

(7) Monthly injury summary report (WD AGO Form 508, or similar forms).

Destroy after 1 year.

(8) Immunization Registers (duplicate) (WD AGO Form 8–117, or similar forms).

Destroy after 2 years.

(9) Inspection Reports; sanitary inspections of messes, quarters, units, barber and beauty shops, etc.; report of physical inspection of military personnel (including report of monthly examination of Medical Department enlisted men); and food handlers, barbers, and beauticians.

Destroy after 1 year.

(10) Locator Cards — patients and hospital personnel.

Destroy 1 year after transfer or discharge of an individual.

(11) Malaria and mosquito-control reports.

Destroy after 5 years.

(12) Medical Disposition Board proceedings.

Destroy after 5 years.

(13) Officers of the day, charge of quarters reports.

Destroy after 3 months.

(14) Requests for post mortems.

Destroy after 1 year.

(15) *Records of Custodian of patients' funds and valuables:* (*a*) Books of account, such as check books, receipt books, ledgers, and similar.

Destroy 3 years after date of last entry.

(*b*) Vouchers, memoranda, receipts, canceled checks, statements, reports, and similar records.

Destroy after 3 years.

(16) Records of Custodian of patients' property (excluding funds and valuables) such as property slips, tags, and receipts.

Destroy 1 year after transfer of patient.

(17) Report of patients remaining in hospital over 90 days.

Destroy after 3 months.

(18) Monthly report of out-patients.

Destroy after 3 months.

(19) Patient statistical cards (name, grade, ASN, assignment classification, etc.).

Destroy after 1 year.

(20) Patient status and progress reports.

Destroy after 3 months.

(21) Monthly report of pregnancy cases.

Destroy after 3 months.

(22) Register books.

Destroy 1 year after completion of book.

(23) Report of Medical Department Personnel (WD AGO Form 8–19 or similar forms).

Destroy after 1 year.

(24) Report of Sick and Wounded (WD AGO Form 8–23 or similar forms).

Destroy after 5 years.

(25) Statistical Health Report (WD AGO Form 8–122 or similar forms).

Destroy after 1 year.

(26) Roster of appointed and commissioned personnel assigned to the Medical Department (WD AGO Form 8–164 or similar forms).

Destroy after 1 year.

(27) Telegraphic report of special diseases.

Destroy after 6 months.

(28) Transfer recommendations and authorizations.

Destroy 3 months after transfer of patient.

(29) Venereal disease questionnaires; periodic reports of new cases (daily, weekly, monthly); weekly venereal disease report.

Destroy after 3 months.

(30) Venereal disease individual and consolidated contact reports; monthly report of venereal disease cases and monthly venereal disease statistical report.

Destroy after 1 year.

(31) Ward morning reports; daily and

weekly census and strength reports; patient rosters.

Destroy after 3 months.

c. MEDICAL AND SURGICAL. (1) Physical Examination reports; such as physical examination prior to discharge of enlisted personnel (WD AGO Form 38); report of physical examination (WD AGO Form 63); enlistment record, WAC (WD AGO Form 721); physical examination, candidate for admission to United States Military Academy (WD AGO Form 0164).

Destroy after 2 years.

(2) Physical classification sheets or cards.

Destroy after 1 year.

(3) Work sheets to physical examination reports.

Destroy after 6 months.

(4) Intervening illness statement of officers.

Destroy after 6 months.

(5) Neuropsychiatric analysis sheet; periodic report on neuropsychiatric treatment.

Destroy after 1 year.

(6) Nurses' notes, night report book, temperature and treatment books, ward narcotic book.

Destroy after 3 months, or 3 months after close of book.

(7) Operation orders and schedules.

Destroy after 1 month.

(8) Operation reports (daily, weekly, and monthly).

Destroy after 1 year.

(9) Emergency Medical Tag (Duplicate) (WD AGO Form 8-26 or similar forms).

Destroy after 3 months.

d. DENTAL. (1) Report of dental services (WD AGO Form 8-98 or similar forms).

Destroy after 1 year.

(2) Dental appointment slip (WD AGO Form 8-103 or similar forms).

Destroy after 3 months.

(3) Prosthetic case record (temporary) (WD AGO Form 8-143 or similar forms).

Destroy after 3 months.

(4) Annual dental survey.

Destroy after 1 year.

(5) Dental classification cards of individuals.

Destroy after transfer of individual.

(6) Annual report of dental services (letter form).

Destroy after 1 year.

(7) Dental work sheets, tabulation sheets.

Destroy after 3 months.

e. LABORATORY. (1) Requests for post mortem.

Destroy after 1 year.

(2) Monthly report of laboratory activities.

Destroy after 1 year.

(3) Plasma questionnaires, orders, and production reports.

Destroy after 1 year.

(4) Water and food analysis reports.

Destroy after 1 year.

(5) Clinical laboratory test reports.

Destroy after 3 months.

f. PHARMACY. (1) Medical prescriptions.

Destroy after 3 years.

(2) Narcotic and drug registers.

Destroy after 3 months.

g. VETERINARY. (1) Report of Medical Department personnel (WD AGO Form 8-19 or similar forms).

Destroy after 1 year.

(2) Veterinary health certificate (WD AGO Form 8-128 or similar forms).

Destroy after 1 year.

(3) Veterinary report of sick and wounded animals (WD AGO Form 8-129 or similar forms).

Destroy after 1 year.

(4) Record and report, physical examination of animals for purchase (WD AGO Form 8-133 or similar forms).

Destroy after 2 years.

(5) Report of veterinary meat and hygiene inspection (WD AGO Form 8-134 or similar forms).

Destroy after 2 years.

(6) Register card for sick and wounded animals (WD AGO Form 8-135 or similar forms).

Destroy 1 year after animal is separated from service at the station by death or transfer.

(7) Roster of appointed and commissioned personnel assigned to the Medical Department (WD AGO Form 8-164 or similar forms).

Destroy after 1 year.

(8) Daily animal sick report.

Destroy after 1 year.

(9) Death certificate of animals (letter form).

Destroy after 6 months.

(10) Report of forage inspected (letter form).

Destroy after 1 year, provided the information contained in these reports is

consolidated in the annual report of the installation.

(11) Report of analysis of food and dairy products.

Destroy after 1 year.

(12) Quarterly veterinary sanitary report (letter form).

Destroy after 6 months.

Section XII. MILITARY PERSONNEL

51. Permanent Records

The permanent records pertaining to military personnel consist of medical and other special types of records as described under appropriate headings elsewhere in this manual; the various reports and papers, such as first copies of morning reports, roster copies of pay rolls, reports of investigation of injuries, etc., which are currently transmitted to and preserved by The Adjutant General; and the records which accompany the individual throughout his service and are forwarded to The Adjutant General at the time of discharge, separation, or release from active duty. Within the last category of individual personnel records are the following:

a. SERVICE RECORD AND ALLIED PAPERS. The service record and allied papers which are required by existing directives to accompany the enlisted man while on active duty are transmitted to The Adjutant General upon discharge, release from active duty, and other applicable circumstances, with the exception of certain specified allied papers listed in paragraph 52*b* below.

b. OFFICERS' QUALIFICATION CARDS. Officer Qualification Cards (WD AGO Forms 66–1, 66–2, 66–3) are permanent records which accompany the officer while on active duty and are sent to The Adjutant General:

(1) In cases of promotion to brigadier general, discharge, relief from active duty, dismissal, retirement, dropped from the records, death, or other separation from service.

(2) In cases where officers are in casualty status, as prescribed by current directives.

c. SOLDIERS' QUALIFICATION CARDS (WD AGO FORM 20). The Soldier's Qualification Card accompanies the individual throughout service and is disposed of as follows:

(1) In the cases of discharged, deceased, or retired personnel, the card will be destroyed when the service record is transmitted to The Adjutant General.

(2) For each man missing, missing in action, captured, interned, or AWOL, the card will be forwarded to The Adjutant General with the service record.

(3) For each man transferred to or remaining assigned to the Enlisted Reserve Corps or Regular Army Reserve the card will be forwarded to the commanding general of the service command in which is located the place of residence designated by the enlisted man upon his release from active duty.

d. 201 FILES. Existing directives require the maintenance of two basic 201 files for each officer and enlisted man while on active duty: one is maintained by The Adjutant General; the other, known as the "Field Military 201 File," is maintained by the unit to which the individual is assigned and accompanies the officer or enlisted man on any change in assignment which requires forwarding of the service record, qualification card, and allied papers to the new station. As specified in paragraph 52, certain papers in the Field Military 201 File are disposable when the individual is transferred, and other papers when he is deceased, discharged, retired, or released from active duty. Retained papers in the Field Military 201 File will be forwarded with the service record or officers' qualification card, and allied papers, to The Adjutant General, Washington 25, D. C.:

(1) When the individual is discharged, deceased, retired, or otherwise separated from service, or released from active duty.

(2) When the individual is AWOL, missing, missing in action, captured, or interned, and at the time specified by current directives for forwarding the service record or officers' qualification card and pertinent papers.

e. EXTRACTS FROM SERVICE RECORD. Extracts from service records (WD AGO Form 25), or suitable index or locator cards, which are required to be maintained separately from 201 files, will be retained if dated subsequent to 30 June 1941.

52. Disposal Standards

a. Temporary papers not transferred with the individual. The papers listed below will not be forwarded with the Field Military 201 File

or other records of the individual when he is transferred, except in the case of specific papers requiring further administrative action, such as unanswered correspondence, and except as provided in applicable AAF directives pertaining to preparation, maintenance, and disposal of AAF Personal Affairs Files of AAF personnel. A temporary file will be used for periodically disposing of the material described below while individuals are attached or assigned to a unit, and for any such material remaining at the time of transfer (which was retained because of its local administrative usefulness), and for papers of transitory value received or created subsequent to departure of individuals, such as copies of transmittal indorsements or acknowledgments of receipts of records. This temporary file will be maintained on a 3-month basis, and its contents destroyed at the end of the succeeding 3 months, for example, the file of temporary papers for period January-February-March will be destroyed on the first of July.

(1) Communications from military personnel and replies thereto relating to: leave, furlough; passes; living and rationing separately; telephone in quarters; operation of automobile on post; credit at post exchange; ration coupons; requirements or opportunities for commission, attendance at officers' candidate or other schools, transfer, and reassignments; and other subjects of a similar nature.

(2) Communications pertaining to pay, allotments, and allowances (after any required entries have been made in the service record or other records of the individual) including such matters as: commencement or discontinuance dates of allotments; nondelivery of bonds or allotment checks; erroneous deductions or payments; statements why allotments are not desired; debits against individual for laundry, motion picture tickets, payment of reward, and transportation incidental to apprehension; assignment and termination of quarters; statements of nonindebtedness; travel allowance; and issue or return of meal tickets.

(3) Communications pertaining to transmission and receipt of records, and exchange of information to complete or correct records (after appropriate entries have been made in the record to be completed or corrected).

(4) Communications from nonmilitary sources, and replies thereto, pertaining to well-being of soldier, nonpayment of debts, addresses, furlough, reassignment to other duties or transfer, and matters of similar nature.

(5) Communications not included above which add nothing to an individual's permanent record such as: correspondence preliminary to issue or amendment of leave orders; reports of lost passes or identification cards; requests for amount of leave taken by officer; request on individual to execute forms; reports to service command of arrival and departure of officers; informal office memoranda; and military policy delinquency reports of minor infractions of military discipline.

(6) Forms, as follow:

WD AGO Form 204, Notice of change of address.

WD AGO Form 240, Form for interviewing and ranking applicants for officer candidate school, or similar forms used for this purpose.

WD AGO Form 269, Enlisted pay data card, or similar form or record containing information used in preparing pay rolls.

WD AGO Form 760, Personal data for officer candidate applicants.

WD AGO Form 775, Officer Candidates General Fitness Rating.

WD AGO Form 971, V-mail change of address.

WD AGO Form 0850, Personnel qualifications questionnaire.

WD AGO Form 0850a, Personnel qualifications questionnaire—Duplicate.

WD AGO Form 0856, ASF position description questionnaire.

WD AGO Form 0857, Officer qualifications record.

WD AGO Form 8-145 (old WD MD Form 130), Spectacle order form.

(7) Officers' leave orders (also furlough as enlisted men).

(8) All orders on enlisted personnel to which a reference is made in the service record, *except that one copy of orders detailing or assigning the individual to a special mission or duty, and one copy of the order affecting discharge or separation will be retained.*

(9) Orders on living and rationing separately.

(10) Work sheets, check lists, and local forms, as follows:

Clearance sheets.

Personal affairs interview sheets or per-

sonal data cards.

Work sheets or questionnaires for preparation of qualification cards, identification tags, statement of charges, etc.

Check list for enlisted man prior to transfer.

Oversea physical examination check list.

Questionnaires executed by officers on reporting.

Officers' qualification code sheet.

Rating scales for OCS candidates and ASTP graduates.

ASTP personal data and interview form.

Card progress record (assignments, efficiency, and promotions of enlisted men).

Military occupational questionnaire.

Spectacle questionnaire (whether individual wears glasses, need for them, etc.).

Transmittal slips and inter/intra office memos.

(11) Dental clearance sheets.

(12) Prescriptions for spectacles and arch supports.

(13) Proceedings of boards of officers to determine suitability for OCS, and related papers, *unless required to be forwarded by specific directive governing selection of officer candidates.*

(14) Cross reference sheets which refer to papers of temporary usefulness, such as letters transmitting records.

(15) Extra copies. All copies in excess of one of any paper which is to be retained.

b. Papers to be destroyed upon discharge, separation, or release of individual from active duty. The documents and papers listed below when found in the Field Military 201 File or when accompanying the service record as allied papers, will be destroyed upon discharge, separation, or release of an individual from active duty. This list, however, is not intended as an enumeration of forms and papers which are required to accompany an individual during service, either in his Field Military 201 File or as a part of his other personnel records. The preparation and distribution (including number of copies made and where filed) of any form or paper will be in accordance with the applicable directive providing for its use.

(1) All papers listed in *a* above.

(2) All forms (except WD AGO Form 30-S, Allotment discontinuance notice upon discharge or release from active duty) pertaining to allowances and allotments, *provided that a careful check has been made against the service record to verify that appropriate entries have been made therein.* In the event such entries have not been made, the form containing the missing data will accompany the service record to The Adjutant General.

(3) All individual clothing and equipment records.

(4) The following forms:

WD AGO Form 8-116 (or old WD MD Form 79), Register of dental patients.

WD AGO Form 8-117 (record copy) (or old WD MD Form 81), Immunization register.

WD AGO Form 20, Soldier's qualification card, *except that where the individual is transferred to or remains assigned to Enlisted Reserve Corps or Regular Army Reserve, the form will be inspected carefully to insure that all information thereon is current,* and will then be forwarded to the commanding general of the service command in which is located the place of residence designated by the enlisted man upon his release from active duty.

WD AGO Form 28, Pay data card for enlisted personnel (after entries have been checked with those in the service record).

WD AGO Form 41, Designation or change of relative to be paid six months' gratuity in case of death.

WD AGO Form 43, Emergency addressee and personal property card.

WD AGO Form 44, Extract copy of morning report.

WD AGO Form 45, Descriptive list of absentee wanted by the United States Army.

WD AGO Form 46, Report of return of absentee to the United States Army.

WD AGO Form 71, also Forms 0337; 0337-R; 0337-T; 0337-IR; and 736, Oath of Office (Duplicate copies only).

WD AGO Form 115, Charge sheet (for courts martial) with related correspondence and papers.

WD AGO Form 170, Application for appointment and statement of preference for reserve officers.

WD AGO Form 172, Personal report of

reserve officer.

WD AGO Form 178, Classification questionnaire of reserve officer.

WD AGO Form 178-2, Classification questionnaire of Medical Department Officers..

WD AGO Forms 302, 303, 304a, and 314 found with the personnel records of an individual.

WD AAF Form 126, Duty assignment card, Air Corps enlisted man.

DSS Form 149, Information for Armed Forces extracted from Selective Service questionnaire.

DSS Form 150, Order to report for induction.

(5) Officers' court martial orders and local routine additional duty assignments and appointments to boards (orders detailing or assigning an officer to a special mission or duty will be retained).

(6) Enlisted men's order to travel as guard or attendant except where travel from or to foreign country is involved.

c. INFORMATIONAL 201 FILES. Informational 201 files are defined as including any military 201 files except the following:

Field Military 201 Files; 201 files maintained by The Adjutant General; and 201 files maintained at service command and department headquarters for personnel of reserve components. Informational 201 files are personnel files maintained at various command levels exercising general administrative jurisdiction or which are created as the result of routing communications through normal military channels.

Destroy temporary rotating file after 90 days. Destroy remaining material upon transfer or reassignment of individual or upon disbandment or inactivation of unit or discontinuance of installation.

d. Copies of reports and returns submitted to higher headquarters as follow:

(1) WD AGO Form 1, Morning Report (UPS copy), *except copies of morning reports retained by the lowest reporting organization.*

When retained in unit personnel section, destroy after 2 years. When forwarded to higher headquarters in accordance with specific directive for audit and control purposes (editing), destroy after 3 months.

(2) Consolidated Morning Report (including WD AGO Form 336).

Destroy after 6 months.

(3) WD AGO Form 74, Return of general prisoners.

Destroy after 1 year.

(4) WD AGO Form 305a, Monthly roster (miscellaneous report form).

Destroy after 1 year.

(5) Consolidated reports of men AWOL and returned from AWOL.

Destroy after 1 year or on inactivation of organization or installation, whichever is earlier.

(6) Reports of casuals reassigned.

Destroy after 1 year.

(7) Reports of separations.

Destroy after 1 year.

(8) Rosters of personnel arriving at units or installations.

Destroy after 6 months.

(9) Strength reports with related working papers, and monthly strength summary cards.

Destroy after 1 year.

(10) WD AGO Form 23, Report of men enlisted for, reenlisted in, or transferred to certain branches, or forms used for the same purpose.

Destroy after 2 years.

e. Records relating to induction, enlistment, assignment, transfer, promotion, discharge, death, as follows:

(1) WD AGO Form 22, Enlisted record—Army of the United States, duplicates only.

Destroy after 2 years.

(2) WD AGO Form 721, Enlistment record—Women's Army Corps (duplicates only).

Destroy after 2 years.

(3) DSS Form 2, Registration certificate, and DSS Form 57, Notice of classification.

Destroy daily after administration of oath.

(4) Applications for discharge or release from active duty and related papers which have been finally disapproved, and which are not required to be forwarded in the Field Military 201 File, *except applications based upon claim of erroneous induction and enemy alienage* which are to be retained in the Field Military 201 File.

Destroy after 1 year.

(5) Applications for Officer Candidate School, and related indexes.

Destroy after 1 year, or on discontinu-

ance of installation or on inactivation of the unit, whichever is earlier.

(6) Applications by military personnel for transfer.

Destroy when obsolete, as when soldier is transferred.

(7) Recommendations for promotion of enlisted personnel.

Destroy on promotion of individual.

(8) Recommendations for reduction in grade of enlisted personnel where reduction is disapproved.

Destroy after 3 months.

(9) Replacement Transfer Orders.

Destroy after 6 months.

(10) Certificates of discharged personnel regarding loss of discharge buttons.

Destroy after 1 year.

(11) Receipts for discharge buttons.

Destroy after 3 months.

(12) Condolence letters to next of kin, copies of which have been required by directive to be forwarded to The Adjutant General.

Destroy after 1 year.

f. Records relating to courts-martial and punishment as follows:

(1) Summary court-martial, *excluding records of trials of civilians.*

Destroy after 1 year.

(2) Special court-martial, *excluding records of trials of civilians, and records forwarded to the officer exercising immediate general court-martial jurisdiction over the command as provided in paragraph 87c, MCM, 1928.*

Destroy after 1 year.

(3) Delinquency reports of minor infractions of military discipline.

Destroy after 3 months.

g. Records relating to leave and furlough as follows:

(1) WD AGO Form 7, Enlisted man's temporary pass, or similar forms.

Destroy when individual turns in pass.

(2) WD AGO Form 31, Furlough.

Destroy original upon individual's return; destroy duplicate after it has served its purpose under AR 615-275.

h. Records relating to the qualification of individuals as follows:

(1) WD AGO Forms 83 through 86 and 88 through 90, Score cards, or similar forms serving the same purpose.

Destroy after classification order has been published.

(2) WD AGO Form 110, Report of individual qualification in arms, or similar forms.

Destroy after 1 year.

(3) Extracts from qualification cards (WD AGO Forms 20, 66-1, 66-2 and 66-3).

Destroy on transfer or separation of individual.

i. WD AGO Form 6, Duty roster (including guard duty), or similar forms for either commissioned or enlisted personnel.

Destroy after 1 year.

j. WD AGO Form 10, Guard reports, or similar forms.

Destroy after 1 year.

k. Records relating to financial transactions as follows:

(1) WD AGO Form 36, Statement of charges against enlisted men (retained organizational copy).

Destroy after 2 years.

(2) Vouchers for pay and allowances, mileage, and per diem and reimbursement of expenses incident to official travel, such as WD Form 336a, Standard Forms 1012a and 1071a—only those copies retained by preparing office for individuals reponsible for certifying and submitting their own vouchers.

Destroy after 3 months.

l. Reports of Boards and Investigations as follows:

(1) WD AGO Form 37, Report of proceedings of board of officers convened under AR 615-368 or 615-369.

When discharge is not effected and no information relative to physical or mental condition is included therein, destroy after 1 year; or when discharge is effected, destroy retained duplicates only after 1 year.

(2) WD AGO Form 51, Report of investigation; and Line of Duty Board Proceedings, the original of which has been required by regulations to be forwarded to The Adjutant General.

Destroy retained copies only, after 2 years.

(3) Proceedings of board of officers convened to determine character of individual and form of discharge certificate to be issued (the orignal of which has been required by regulations to be forwarded to The Adjutant General).

Destroy retained organization copy after 1 year.

m. WD AGO Form 302, Morning report locator card; WD AGO Form 303, Report of

change, WD AGO Form 304a, Locator card WD AGO Form 314, Individual report of change (machine prepared); WD AGO Form 401, Locator card—Army Postal Service; locator cards prepared locally not bearing WD AGO Form number.

Destroy 1 year after transfer of individual.

n. Standard Form 26, Driver's Report—Accident—Motor Transportation, *except where filed as a part of a report of survey, or where constituting an exhibit to a report of investigation required by AR 25-20 (duplicate copy).*

Destroy after 2 years.

o. Daily officer of the day and charge of quarters reports.

p. Officers registers (containing time of arrival, departure, signature, etc.).

Destroy after 5 years.

q. Soldier Voting Records, consisting of records created in connection with the administration of soldier voting procedures, including the records of issue of post card applications for State absentee ballots, and records concerning the Federal balloting "units."

Destroy 1 year after the date of the election

Section XIII. MILITARY TRAINING

53. Permanent Files

a. Records of long-time or permanent value relating to military training activities fall into two groups: first, records of individual students which contain information as to courses attended, length of each, whether or not completed, and grades attained; second, the history of the training at particular installations, contained in records such as academic and faculty board reports and records, class records and school rosters, school publications, technical instructional materials and training aids, and training schedules.

b. Retention of records listed under the first group above is essential because of the value of the information contained therein to the individual for further educational training and for securing employment in civilian life.

54. Disposal Standards

a. Surplus copies of school publications, technical instructional materials, and training aids (*excluding photographic materials*), and training schedules, *exclusive of one record set of each series for the issuing office.*

Destroy on supersession, when obsolete, or on discontinuance of installation, whichever is sooner.

b. Statistical records on training, as statistics on strength and progress.

Destroy after 5 years.

c. Training status and progress reports submitted to higher headquarters.

Destroy after 1 year, or on discontinuance of installation, whichever is sooner.

d. Training directives from higher headquarters.

Destroy on supersession, when obsolete, or on discontinuance of installation, whichever is sooner.

e. Individual assignment preference sheets.

Destroy on transfer of individual.

f. Completed registration forms.

Destroy on graduation or transfer of individual.

g. Elimination board proceedings.

Destroy after 1 year, or on discontinuance of installation, whichever is sooner.

h. Student examination papers.

Destroy after grades have been entered on permanent academic records.

i. Daily attendance records showing presence or absence of students at lectures, study periods, and comparable information.

Destroy after 6 months.

j. Reference files of art material, manuscripts, and other technical materials used in preparing instructional material used in training.

Destroy on supersession, when obsolete or on discontinuance of installation, whichever is sooner.

k. Officer Candidate School serial number assignment records.

Destroy on discontinuance of installation.

l. Records of units established under the Army Specialized Training Program and Army Air Forces College Training Program including such items as reports to higher headquarters pertaining to strength, availability and assignment, enrollments, academic progress, physical efficiency tests, continuation of study under program, separation from program, and production, *exclusive of individual academic records mentioned in paragraph 53.*

Destroy 1 year after inactivation of unit.

Section XIV. MOTOR POOL OPERATIONS

55. Permanent Files

Permanent files which relate to the registration of motor vehicles are maintained by the Engineering Manufacturing Division, Office of the Chief of Ordnance.

56. Disposal Standards

a. Preventive maintenance inspection work sheets for vehicles (WD AGO Forms 461, 462, 463, 464, and similar forms).

Destroy after completion of next semi-annual or similar maintenance service.

b. Spot check inspection reports (WD OO Form 7353, WD AGO Forms 9-68 and 9-69, or similar forms).

Destroy after 1 month.

c. Automotive disability reports (WD AGO Form 13-1 and WD IGD Forms 5-A, 5-C, 5-T, and 6, and similar forms).

Destroy after 6 months.

d. Motor Vehicle Servicing and Dispatching Records, which include drivers' trip tickets, daily dispatching records, and comparable papers, *except such records that pertain to vehicles involved in accidents, on which action has not been completed by the claims officer.*

Destroy after 1 month.

e. Preventive maintenance roster (WD AGO 460, or similar forms).

Destroy after 6 months.

f. Drivers' License Examinations, and papers related thereto.

Destroy after recording entry on soldier's qualification card, or on a permanent record.

g. Motor Vehicle Registration Files or Documents, which consist of motor vehicle registration cards and data for the registration of motor vehicles.

Destroy on transfer of accountability or responsibility for the vehicle.

h. Motor Vehicle Locator, Inventory, or Identification Cards, Sheets, or Tags.

Destroy on supersession, or when obsolete.

i. Vehicle Inventory and Density Reports, such as vehicle density reports, inventory reports of motor vehicles and comparable statistical reports, and data relating thereto.

Destroy after completion of next report, or after 1 year, whichever is applicable.

j. Issue Records of Gasoline and Lubricants for Motor Vehicles, such as gasoline and lubricant issue slips, monthly abstracts of fuel issued, and comparable records.

Destroy after 1 year.

(*See also* par. 45.)

Section XV. PHOTOGRAPHIC FACILITIES

57. General

The physical characteristics of photographic files require that special facilities be provided for the storage, processing, and administration of records which must be retained permanently. Types of photography to be retained include:

a. News Photography. Views of combat operations, new equipment, base activities, human interest material, etc.

b. Training and Instructional Photography. Photography showing training methods and techniques, school activities, equipment operation, field expedients, and other material for orientation information or educational purposes.

c. Historical Photography. Photography covering events of historical importance, war theater activity, campaigns, ceremonies, presentation of citations, tactical training operations, maneuvers, etc.

d. Unusual and Scenic Photography. Photography of interest because of unusual photographic treatment, studies of terrain, color photography, night views, etc.

e. Captured enemy photography and photography purchased from foreign sources.

f. Intelligence photography.

g. Mapping and charting photography including aerial reconnaissance and radarscope photography.

58. Centralization of Photographic Files

The types of photography to be centralized and the procedures for the current forwarding of photographic records to the custody of the Commanding General, Army Air Forces, and the Chief Signal Officer, Army Service Forces, are specified in current directives.

a. Air Force aerial and ground still photography is centralized by Photographic Division,

AC/AS Intelligence, Hqs AAF.

b. Air Force air and ground motion picture photography is centralized by Combat Film Service, AC/AS Intelligence, Hqs AAF.

c. All other still photography (except as specified in current War Department directives) is centralized by the Army Pictorial Service, Office, Chief Signal Officer.

d. All other motion picture photography (except as specified in current War Department directives) is centralized by the Signal Corps Photographic Center, Office, Chief Signal Officer.

59. Retirement to Depots

Photographic files not required to be centralized as directed by current War Department directives, or for which special handling is not prescribed in this chapter, will be retired to the appropriate records depot or War Department records depository. Photographic prints or negatives which are filed with and constitute an integral part of nonphotographic files will be handled as prescribed for such documents.

60. Disposal Standards

a. Nonrecord material as defined by the Commanding General, Army Air Forces and the Chief Signal Officer in current directives.

Destroy, salvage, or other disposal as directed.

b. Original negatives and duplicate negatives from which prints have been made to accompany unsatisfactory equipment reports, damage reports, accident reports, and similar reports.

Destroy when no longer needed for reference.

c. Identification pictures.

Destroy when no longer needed for reference.

d. Spoiled or damaged film which is unusable.

Destroy when unusable.

e. Laboratory and Photographic Work Order Files.

Destroy after 6 months.

f. Photographic Report Files, consisting of film survey reports, photographic production reports, film library reports, or comparable reports made to higher headquarters.

Destroy after 1 year.

g. Film Booking Ledgers.

Destroy 3 years after date of last entry.

h. Film Library Control Records, consisting of booking sheets, prints record cards, photographic equipment cards, and comparable control cards or sheets.

Destroy on supersession, or when obsolete.

Section XVI. POSTAL AND COURIER SERVICE

61. Special Handling of Files

a. Noncurrent Post Office Department forms, and records of the receipt of registered and insured mail (WD AGO Form 922, or similar forms) when used by bonded Army mail clerks to obtain receipts from unit and regimental mail clerks, which accumulate in Army Post Offices or are in the possession of bonded Army mail clerks serving Army organizations and installations in the continental United States, will be turned over to the accountable United States postmaster: (1) at such times as he may direct, (2) upon redeployment, when the unit becomes accountable to another postmaster; (3) when necessary to relieve storage facilities, (4) when such organization or installation is to be inactivated or disbanded, or (5) on movement overseas. (T/O units moving overseas will retain postal service records accumulated during the preceding 6 months' period, plus any papers on which inquiries have been received within a 2-year period.)

b. When inactivation or disbandment of postal units is effected overseas, United States Post Office forms, and records of the receipt of registered and insured mail (WD AGO Form 922, or similar forms) when used by bonded Army mail clerks to obtain receipts from unit and regimental mail clerks, will be forwarded to the accountable United States postmaster. Other postal administrative records will be transferred to the appropriate oversea records depot.

c. The central postal directory of each theater of operations or other oversea command will maintain as a permanent record the latest locater card for each individual who has received mail in the command. Similar cards will be maintained as a permanent record in the postal directory files of domestic ports of embarkation.

62. Disposal Standards

a. Records of the receipt of registered and insured mail (WD AGO Form 922, or similar forms) *except: (1) such records on which a claim or inquiry is outstanding; (2) when used by bonded Army mail clerks to obtain receipts from unit and regimental mail clerks; and (3) United States Post Office Department forms.*

Destroy after 4 years.

b. Records of the receipt of registered and insured mail (WD AGO Form 922, or similar forms) on which a claim or an inquiry is outstanding, *except: (1) when used by bonded Army mail clerks to obtain receipts from unit and regimental mail clerks; (2) and United States Post Office Department forms.*

Destroy on disposition of claim or inquiry, providing a time period of 4 years has elapsed.

c. Yearly records of lost or rifling of mail (WD AGO Form 980, or similar forms).

Destroy after 4 years.

d. Unit Mail Clerk Authorizations.

Destroy after 4 years.

e. Army Postal Service Standard Pouch Records of mail received and dispatched.

Destroy after 2 years.

f. Postal Locator Cards (such as WD AGO Forms 302, 304, and 401), *except cards needed for other than postal purposes.*

Destroy 6 months after transfer, departure, or separation of an individual, whichever is applicable.

g. Register and/or log of incoming and outgoing insured, registered, special delivery, and C. O. D. mail and parcel post, *excluding United States Post Office Department registers or logs.*

Destroy after 4 years.

h. Postal Service Control Records, consisting of indexes to temporary and permanent Army Post Offices, cable addresses, routing words, and geographical location.

Destroy when obsolete or superseded.

i. Postal Shipping Reports, including records of mail received, dispatcher, and on hand, daily shipping reports, and similar records.

Destroy after 2 years.

Section XVII. PUBLIC RELATIONS

63. Permanent Files

Records maintained by public relations officers which reflect the more important activities of an organization or installation will be retained as a permanent record of those activities. Documents of this type consist of written and pictorial releases, radio scripts and speeches, other than such items transitory or otherwise nonrecord in character as defined by paragraph 26. One record set of each camp or installation newspaper will be retained.

64. Disposal Standards

a. Statistical reports of public relations activities, which show the number of releases, radio programs, and similar information.

Destroy after 1 year, or on discontinuance of installation.

b. Mailing lists not subject to revision, and correspondence connected therewith.

Destroy after 2 years, or on discontinuance of installation.

c. Mailing lists subject to revision, and correspondence connected therewith.

Destroy on revision, or when obsolete.

d. Data sheet and background materials for releases on agencies and individuals.

Destroy after 1 year, or on discontinuance of installation.

e. Nominations, supplemental nominations data, and efficiency ratings for Army-Navy "E" and "Star" awards initiated by the technical services, Army Service Forces, and by the Army Air Forces, *excluding files containing nominations disapproved by the technical services or Army Air Forces.*

Destroy after 1 year.

(*See also* par. 36*b*.)

Section XVIII. PUBLICATIONS, REPRODUCTION, AND BINDING

65. Permanent Files

The record set for each series of War Department and Army directives and publications, posters, and Graphic Training Aids (exclusive of motion picture slides and film strips) at all echelons, will be maintained by the issuing headquarters. Copies of such directives and publications when constituting an essential part of a case file will have the same disposition as for that file. Surplus copies will be returned to supply channels when the quantities thereof and the character of the material (as, for example, Graphic Training Aids, Technical Manuals, Field Manuals, and catalogs), warrant such action, in the judgment of the responsible officer.

66. Disposal Standards

a. Surplus copies of War Department and Army publications (that is, *exclusive of the record set referred to above*).

(1) Army Regulations, Technical Manuals, Field Manuals, Training Manuals, Training Standards, Technical Bulletins, Technical Orders, Supply Bulletins, Tables of Organization, Tables of Allowances; published or processed orders, circulars, mimeographed memoranda, directives, troop movement orders, and other processed documents.

Destroy on supersession, or when obsolete.

(2) Excess Stock Reports, Reports of Excess Equipment, and similar processed or published reports.

Destroy on supersession, or when obsolete.

(3) Posts, camps, stations, or organization daily bulletins, daily information sheets, and similar documents.

Destroy on supersession, or when obsolete.

b. Publications of other Government agencies, commercial firms, or private institutions, and including catalogs, trade journals, and similar publications.

Destroy on supersession, or when obsolete.

c. Reproduction materials, such as stencils, master dittos, multilith plates, photostat negatives, and process negative files (offset printing).

Destroy or salvage, whichever is applicable, when obsolete, or when deterioration makes reproduction unsatisfactory.

d. Reproduction job control files, including requisitions for reproduction, work orders, and delivery receipts.

Destroy after 6 months.

e. Inventory and Report Files consisting of inventories of field plants (JCP Form 5 and similar), contract printing reports (JCP Form 2 and similar forms) together with correspondence pertaining thereto.

Destroy after 2 years.

f. Requisitions for printing and binding.

Destroy after 3 years.

g. Operation Report Files consisting of individual and consolidated operations reports (WD AGO Form 228 and 0228, and similar forms) together with related correspondence.

Destroy after 1 year.

h. Control and Processing Files consisting of papers utilized for purposes of controlling work in progress, such as stenographic assignments, records, stencil control cards, information and instruction sheets, lay-outs, daily production records, progress reports, job tickets on labor and materials, and similar control records, together with correspondence and allied papers, exclusive of files described above.

Destroy after 3 months.

i. Requests or requisitions for publications, nonaccountable blank forms, office equipment, or similar routine requests, and other records related thereto.

Destroy after 3 months.

j. Accountable Forms Requisition Files, consisting of requisitions for blank accountable forms which are subject to special control by reason of the monetary value of the forms, such as transportation requests, transportation requests identification cards, bills of lading, tax exemption certificates, tax exemption certificate identification cards, charge sales slips, and meal tickets; acknowledgments of the receipt of such documents; and correspondence and other papers which relate to the accountability for such forms—providing listings, receipt cards, registers, or similar control devices are maintained showing the receipt and disposition of such forms.

Destroy after 5 years. (If listings, etc., are not maintained, retain as specified for item *k* below.)

k. Listings, Receipt Cards, or Registers, showing the issue or receipt of blank accountable forms which are subject to special control by reason of the monetary value of the forms, such as transportation requests, transportations requests identification cards, bills of lading, tax exemption certificates, tax exemption certificate identification cards, charge sales slips, cash sales slips, and meal tickets.

Destroy after 10 years.

(*See also* pars. 80 and 81.)

Section XIX. PURCHASING AND CONTRACTING

67. Permanent Files

a. GENERAL. Purchasing and contracting records, which constitute one of the largest categories of files accumulated in the War Department and Army, must be retained to protect the interests of the War Department against claims or other legal action. With certain qualifications, a 10-year retention period will satisfy this requirement, since the Statute of Limitations (54 Stat. 1061; 31 U.S.C. 7a 237) establishes a 10-year period during which claims can be brought against the Federal Government. This applies particularly to files relating to small and housekeeping procurement. Purchasing and contracting records, particularly those relating to the major program of military supply, lend-lease, civilian supply, and disposal of surplus property, must also be retained to satisfy any future interest of the Congress and the General Accounting Office in the purchasing and contracting activity of the War Department. Finally, those files will be retained which reflect the organizational and procedural aspects of the procurement program or which would be useful in appraising the effectiveness of procurement planning.

b. CENTRALIZATION OF PROCUREMENT FILES. (1) Procurement files originating in certain agencies of the Army Service Forces and Army Air Forces, as specified by the commanding generals thereof, are centralized for long-time retention, and include contract, purchase order, delivery order, any other procurement document files, together with all records and data on directives, bids, proposals, summary of proposals, awards, acceptances, price analyses, production, labor, expediting, inspection, bonds, insurance, fiscal vouchers, priorities, allocations of equipment and material, termination, disposal of termination inventory, contract property as defined in AR 35-6700, reports and correspondence related to the foregoing, but excluding—

(*a*) Certain procurement records, of the Army Service Forces only, which are authorized for disposal at the expiration of the time period specified in statute of limitations on claims or demands against the United States, in accordance with the provisions of paragraph 68;

(*b*) Procurement records which relate to individual contracts, but which are not a part of a specific contract, for instance, group or company wide terminations, company pricing, fiscal accounting records;

(*c*) Records evidencing the procurement of real estate;

(*d*) Procurement records involving civil funds of the Corps of Engineers;

(*e*) Statutory renegotiation files.

(2) Files of the Army Air Forces are centralized under the Air Technical Service Command, and certain files of the Army Service Forces at the Contract Records Branch, AGO, in accordance with instructions issued by the Commanding Generals, Army Air Forces and Army Service Forces.

c. RETIREMENT TO RECORDS DEPOTS. Files relating to purchasing and contracting other than those specified above will be retired to the appropriate service command or oversea records depots.

68. Disposal Standards

a. Procurement Records subsequent to 1 January 1920 and prior to 30 June 1934 (that is, the date of final payment of the procurement to which they relate) including contracts, purchase orders, delivery orders, or other procurement documents together with related and supporting papers essential to each phase of the procurement such as, directives; bids; proposals, summaries of proposals; award; acceptance; price analyses or cost computations; production; labor; expediting; inspection; bonds; insurance; fiscal vouchers; allocations of equipment and material; and contract property records as defined by AR 35-6700, *except files which are known to be pertinent to an unsettled claim, incomplete investigation, or pending litigation.*

Destroy in class I and II installations immediately; destroy in class III installations after approval of specific record series by Headquarters, Army Air Forces; destroy in class IV installations after approval of specific record series by office of the chief of responsible technical service or director of staff division, Army Service Forces; and destroy in all other installations after approval of The Adjutant General. (Procurement rec-

ords, the date of final payment of which is prior to 1 January 1920, will be reported to The Adjutant General for disposition instructions, as required by par. 25.)

b. Records of Small Procurement, consisting of files accumulated in the process of local procurement and procurement for maintenance, upkeep, repair, and housekeeping, the date of final payment of which is after 30 June 1934, including contracts, purchase orders, delivery orders, or other procurement documents, together with related and supporting papers essential to each phase of the procurement, such as directives; bids; proposals; summaries of proposals; award; acceptance; price analyses, production; labor; expediting; inspection; bonds; insurance; fiscal file (par. 23, M 603); interim financing; priorities and allocations of equipment and material; price adjustments by contracting officer; contract termination; disposal of termination inventory; and contract property records as defined in AR 35-6700, *except files which are known to be pertinent to an unsettled claim, incomplete investigation, or pending litigation.* The records of small procurement, as defined above, will not include:

(1) Files which are a part of a procurement, the value of which is $25,000 or more;

(2) Files of construction contracts administered by class IV installations of the Chief of Engineers;

(3) Files which pertain to lend-lease and civilian supply;

(4) Files accumulated by any of the following listed offices and installations of the Army in the execution of their primary mission of procurement for the Army at the immediate direction of the Commanding General, Army Air Forces, or the chief of the responsible technical service, Army Service Forces (the following is a complete listing of all exempted installations and offices, including certain major subordinate command headquarters, even though disposal standards as contained in this chapter are not applicable to such headquarters as prescribed by par. 25):

(*a*) Army Air Forces Air Technical Service Command Headquarters (including Procurement District Headquarters);

(*b*) Quartermaster Depots and Quartermaster Supply Sections of ASF Depots (except Schenectady, Savannah, New Cumberland, and Columbus);

(*c*) Office of the Chief of Ordnance (including the office of the Field Director of Ammunition Plants, and small Arms Ammunition suboffices), District Ordnance Offices, Ordnance Arsenals, and Ordnance Proving Grounds;

(*d*) Office of the Chief of Engineers, Division Engineer Offices, and District Engineer Offices;

(*e*) Office of the Chief of Chemical Warfare Service, Chemical Warfare Service Procurement Districts, and Chemical Warfare Service Arsenals;

(*f*) Office of the Chief Signal Officer, Signal Corps Procurement District Offices, and Signal Corps Ground Signal Agency;

(*g*) Army Medical Purchasing Office; and

(*h*) Office of the Chief of Transportation, and Zone Transportation Offices.

Destroy those files relating to procurements from corporations and other artificial legal persons 10 years after date of final payment; destroy those files relating to procurements (made before peace is established) from individuals or partnerships after the lapse of at least 10 years after date of payment but in no case before 5 years after peace is established (par. 1*f*, AR 35-730); destroy those files relating to procurements made after peace is established from individuals or partnerships 10 years after date of payment.

c. OTHER PROCUREMENT RECORDS. (1) Invitations to bid relating to contracts negotiated under the First War Powers Act and Executive Order No. 9001 *except when used by contractors to present a bid,* in which case the form becomes the bid itself and not disposable under this authority.

Destroy after final payment of the related contract.

(2) National Defense Program Personnel Cards.

Destroy after final payment of the related contract.

(3) Radiographs, micrographs, macrographs, and other films and prints acquired in the process of inspecting matériel prior to acceptance by the Army, *except those pertinent to unsettled claims.*

Destroy 6 months after final payment of the related contract.

(4) Individual case files of proposed contracts which were canceled prior to issuance of

an award, including, but not limited to, orders to procure, invitations to bid, formal and informal bids, notices of inability to bid, abstract of bids, specifications, proposals, and correspondence relating thereto.

Destroy after 6 months.

(5) Preference Rating and Rerating Certificates.

Destroy issuing officer's copy 6 months after final payment of the related contract, or 2 years after date of certificate, whichever is longer; all other copies, 3 months after date of issue.

(6) Requests for Priorities and Preference Ratings and requests for expediting assistance in connection therewith, except such records in the custody of an installation administering the contract to which they relate, in which case these records will become a part of the contract to which they pertain.

Destroy after 6 months.

d. Contractor's Records, in the custody of the Army (as distinguished from Army contract records), such as: personnel records of employment constructing contractors; time cards for contractors employees, and other contractors records in the custody of the Army, *except: (1) contract property records (as provided in sec. VI, TM 14-910) and, (2) intelligence files of government-owned contractor-operated plant employees.* (For disposition of these records, see par. 77.)

Destroy 5 years after disposition of termination inventory by related war contractor or Government agency; or 5 years after final settlement of related war contract; or 5 years after termination of hostilities in the present war as proclaimed by the President or by a concurrent resolution of the two houses of Congress, whichever applicable period is longer, or after microfilming pursuant to Office of Contract Settlement Regulation No. 11, 24 January 1945.

Section XX. QUARTERMASTER FACILITIES

69. Permanent Files

Permanent cemeterial records consist of burial registers (as required by law), reports and summaries of interment and comparable documents, and statistical reports to State or local vital statistics officials.

70. Disposal Standards

a. CEMETERIAL SERVICE, IN CONTINENTAL UNITED STATES ONLY. (1) Grave Reservation Files, consisting of requests for and granting of grave reservations, and papers pertinent thereto.

Destroy on interment of subject.

(2) Certificates of Inspector's and Undertaker's Receipt for remains.

Destroy after 1 year.

(3) Records relating to headstone forms, and quarterly reports of operations (that is, of burial, space, cost of operations, etc.).

Destroy after 5 years.

b. LAUNDRY AND DRY CLEANING OPERATIONS. (1) Unit and Organizational Laundry Records, such as Monthly Roster and Statements, Weekly Collection and Delivery Sheets, the Hospital and Organization Lists, and comparable papers retained by a unit or organization as a record of the delivery and receipt of laundry.

Destroy after 1 year.

(2) Station Laundry and Dry Cleaning Records, including Reports of Laundry and Dry Cleaning Operations, Abstracts of Enlisted and Bulk Work, Abstracts of Work accomplished for Individual Patrons, other documents relating to the receipt, processing, return, and accounting for laundry and dry cleaning, and any supporting documents thereto.

Destroy after 2 years, providing pertinent records have been audited and cleared.

c. MESS MANAGEMENT. (1) Garrison Ration Accounts and Records (other than when used as an entry or a voucher to a Unit Fund) such as daily stock cards, monthly recaps, and adjustment papers.

Destroy after 1 year.

(2) Field Ration Accounts and Records, such as Daily Ration Requests, Consolidated Ration Requests, Monthly Ration Records, Mess Attendance Records, and similar papers retained by a unit or organization relating to the issue of field rations.

Destroy after 1 year.

d. SALES COMMISSARY OPERATIONS. (1) Sales

Officer's Account, vouchers, subvouchers, and supporting documents and attachments thereto, consisting of shipping documents; copies of purchase or delivery orders; receiving reports (with related packing lists and tallies) shipping tickets; property turn-in and issue slips; Daily Cumulative Summaries of Field Rations Issued; Monthly Abstracts of Supplies Transferred to Meat Market and of Ingredients Issued to Bakery; Reports of Deposit; Reports of Charge Sales; Inventories of Subsistence Supplies; Reports of Survey; Certificates of Gains, Losses, and Discrepancies; and comparable documents, and other papers filed with vouchers to the Sales Officer's Account.

Destroy 2 years after audit and clearance of the Sales Officer's Account.

(2) Menu Recapitulation Journal, Consumption Record, Menus, and comparable documents or registers retained by the Sales Commissary for planning or control purposes.

Destroy after 1 year, or when obsolete, whichever is applicable.

(3) Depot Price Lists, and supplements thereto.

Destroy after 1 year, or when obsolete, whichever is applicable.

(4) Monthly Commissary Operating Statement, or comparable reports of operations of the Sales Commissary made to higher headquarters.

Destroy 1 year after audit and clearance of the Sales Officer's Account.

(5) Cash Sales and Charge Sales Books, Charge Sales Slips, including attached informal lists, machine detail tape, machine sales tickets, and such other papers of the Sales Commissary that relate to cash and charge sales by the sales store, *but are not filed with vouchers to the Sales Officer's Account.*

Destroy 2 years after audit and clearance of the Sales Officer's Account.

(6) Requisition Files or Documents, consisting of station stock status reports, purchase requests, requisitions, advice of action (such as copies of purchase orders, copies of shipping instructions, requests for bids, letters or telegrams of instructions to make substitutions), and such other papers retained as a record of the requisition of supplies for the Sales Commissary, *but exclusive of such documents when filed with vouchers to the Sales Officer's Account.*

Destroy 1 year after audit and clearance of the Sales Officer's Account.

(7) Warehouse Files or Documents, consisting of shipping documents, requisitions, and such other papers which constitute notification of due-in shipments or are used to plan space utilization for incoming shipments.

Destroy on receipt of shipment, or on completion of plan for space utilization of incoming shipment, whichever is applicable.

(8) Bakery and Meat Market Files, consisting of property turn-in slips, memorandum requests, tallies, and such other papers retained as record of transfer of bread from and ingredients to the bakery, or of transfers of meat to the meat market.

Destroy 2 years after audit and clearance of the Sales Officer's Account.

(9) Ration Requests, including requests for troop train rations, consolidated ration requests, memoranda of field ration issues, field ration issue slips, or comparable documents retained by the Sales Commissary relating to requests for the issue of field rations, *but which are not filed with vouchers to the Sales Officer's Account.*

Destroy 1 month after audit and clearance of the Sales Officer's Account.

Section XXI. RATIONING OPERATIONS

71. Permanent Files

Staff studies and other policy papers which relate to the War Department's participation in the price control and rationing program are retained in headquarters files. Other than these, no files of continuing interest or long-time usefulness are accumulated as a result of rationing operations.

72. Disposal Standards

a. Records pertaining to the ration banking system, which include papers of the type: copies of deposit slips; notices of error in deposit slips; statements of account; check stubs, returned, unused, spoiled checks; registers and control devices; pertinent correspondence; ration invoices and applications for replacement

and advances of rationed foods contained in other products; reports, and similar records.

Destroy after 1 year.

b. Register of applications for shoe purchase certificates.

Destroy after 1 year.

c. Records pertaining to the issue of accountable OPA gasoline forms R593 and R594.

Destroy after 1 year or after inspection and audit by the appropriate higher command, whichever is sooner.

d. Records pertaining to all phases of the rationing program other than the three above groups, which include papers of the type: card files of applicants, copies of orders justifying gasoline coupon issue, car pool records; applications for ration certificates and coupons used in purchasing food, shoes, fuel oil, gasoline, and other rationed commodities; registers and control devices; pertinent correspondence; reports and similar records except for unused accountable forms, which will be returned to the appropriate office.

Destroy after 3 months, or on inactivation of the administering installation, or on discontinuance of pertinent rationing program, whichever event occurs first.

Section XXII. REPAIRS AND UTILITIES

73. Permanent Files

The joint post-planning files — Master Plan Files—of the post commander, post engineer, and Engineer Board, consisting of maps, plans, reports, photographs, and other documents which designate the existing and proposed use and development of land and water areas within the post boundaries, constitute permanent records to be maintained at the station or installation, and on discontinuance of the installation will be retired to the appropriate records depot.

74. Files Specially Handled

a. Permanent guide files to real property maintained by the post engineer, consisting of real property record cards, maps and lay-outs, specifications, surveys, reports, and similar documents will be maintained at the installation or station until such time as the custody and control of surplus real estate passes to the Chief of Engineers, at which time the real property records will be audited and transferred, together with other permanent guide files to real property, including the last rendered Real Property Inventory Report and Real Property Utilization Report, to the representative of the Chief of Engineers.

b. Records of the post engineer which are likewise retained at the post and remain with the grounds and buildings are as follows: fire prevention and protection records, which relate to the alarm procedure, location of hydrants, of available post fire-fighting equipment, sources of supply, tables of distances and time-runs, pressure in water mains, and liaison with nearby civil or military fire organizations; and, records of preventive maintenance relative to the upkeep of buildings and grounds, necessary to maintain essential data on the conditioning of the buildings and grounds.

c. Other classes of records which are permanent in character, except for specific files described under paragraph 75, consist of: utility operating logs; data on operating instructions, replacement parts, efficiency curves, fuel requirements, and similar records; and records of preventive maintenance relative to the upkeep of equipment, including motor-driven fire-fighting equipment. These records will remain on the premises with the equipment and machinery to which they relate, and are transferable with such equipment.

d. Project files relating to construction accomplished by post engineers with funds allocated by the Office, Chief of Engineers (formerly by the Constructing Quartermaster) will be transferred to the Office of the District Engineer having jurisdiction upon completion of the project, for processing prior to retirement to the Contract Records Branch, AGO. (See pars. 67 and 68.)

75. Disposal Standards Applicable to Post Engineer Files

a. Records relating to the repair and upkeep of buildings, structures, sewers, roads, walks and grounds, railroads, runways, airfield aprons, target ranges and shooting galleries,

accessory installed equipment, special-purpose vehicles, and similar installations, grounds, and equipment, including the construction of housing facilities for troops on field exercises, other minor construction, alteration or diminution of the physical plant, and the installation or replacement of accessory installed equipment:

(1) Progress and Work Reports, including correspondence and other papers related thereto.

Destroy daily reports after 1 year, or on inactivation of installation; destroy all other reports after 2 years.

(2) Work Orders and Authorizations Files, such as Work Orders, Job Requests, Work Order Registers, Job Registers, and related papers filed with a work order file, *except those directly associated with contract work.*

Destroy after 3 years.

(3) Availability Reports on Real Property Facilities, such as reports on the housing of enlisted men, reports of refrigeration facilities, reports on purchased and well-water supply, real property utilization reports, real property inventory reports, similar reports, and correspondence and other papers relating thereto.

Destroy after 2 years; or destroy on discontinuance of the station or installation, except the last rendered Real Property Utilization Report and Real Property Inventory Report.

b. Records relating to the inspection of equipment, buildings, and grounds, and the systematic checking on the efficiency of utility services:

(1) General Inspection Reports, including correspondence and other papers relating thereto.

Destroy daily reports after 2 months, or on inactivation of the installation; destroy all other reports after 2 years.

(2) Equipment and Equipment Parts Inspection Records, consisting of testing reports, and related papers, on valves, gauges, fittings, insulation, wiring and connections, grease traps and oil interceptors, all safety devices and electrical equipment, firehose, hydrants, thermometers, compressors, motors, tanks, boilers, etc., *but excluding records when relating to storage batteries* which are subject to manufacturer's guarantee provisions of service life, the reports relating to which are disposable on termination of guarantee provisions.

Destroy after 2 years.

(3) Service Economy Reports, including correspondence and other papers relating thereto.

Meter reading reports, and similar records, destroy after 3 years; Reports of Excessive Consumption or Abuse of Facilities, destroy after 2 years.

c. Laboratory Testing Files, relating to laboratory testing of tools and parts of equipment, water, brine, sewage, and related testing and sampling, including correspondence and work papers, *except laboratory test reports contained in utility operating logs.*

Destroy after 2 years, or on discontinuance of installation.

d. Records relating to the operation of central heating plants, water supply, sewage treatment, repair shops, etc., and of the fire-fighting service, and consisting of records of the type of utility reports on particular plant or shop operations, and fire-fighting records of the type of minutes of safety meetings and records of attendance, individual fire runs and fire reports, fire record journal forms, reports on existing fire hazards, card files showing service on each fire extinguisher, correspondence, and other related papers, *except for operating logs.*

Destroy after 2 years, or on discontinuance of station or installation.

e. Records relating to the instruction and training of fire-fighting details, consisting of personnel records, drill and equipment reports, and related correspondence and other related papers.

Destroy after 2 years, or on discontinuance of the installation.

f. Property Records, relating to the storage and issue of fuel, tools, fire-fighting equipment, and other construction and maintenance equipment, *except such records pertaining to lend-lease, reciprocal aid, and civilian supply.*

(1) Accountable Property Records, consisting of stock record cards, shipping documents, tallies, other property vouchers, and voucher registers equipment cards, and requisitions on storekeeper.

Destroy 2 years after property audit and clearance, except stock record cards for items of supply and equipment transferred to the Chief of Engineers, and contract property records as defined in AR 35-6700.

(2) Memorandum Receipt File, consisting

of memorandum receipts for supplies or equipment issued by the post engineer.

Destroy on return of property, on consolidation, or otherwise satisfactory accounting of responsibility.

g. COST ACCOUNTING RECORDS: (1) Daily and Interim Cost Accounting Records, such as the daily labor reports, requisitions on storekeeper, cost distribution vouchers, voucher registers, summary of labor and material, etc.

Destroy 2 years after engineer audit and clearance.

(2) Cost Accounting Ledgers, such as cost ledger sheets for feature and subfeature accounts and for reconciliation accounts.

Destroy 2 years after last engineer audit involving such record.

(3) Reports such as station cost reports, individual project reports, etc.

Destroy 2 years after engineer audit and clearance of pertinent accounts.

Section XXIII. RESEARCH AND DEVELOPMENT

76. Permanent Files

a. GENERAL. Records which relate to research on and development of supplies and equipment, which concern physical and chemical developing and testing, specifications, quality control, drafting and design, experimentation, and comparable activities, including liaison with other Army, governmental, and civilian agencies, constitute permanent records.

b. SPECIAL HANDLING. Noncurrent files of the Army Air Forces relating to matériel research, engineering, and development will be centralized under the Air Technical Service Command, as directed by the Commanding General, Army Air Forces.

Section XXIV. SECURITY AND INTELLIGENCE

77. Permanent Files

a. GENERAL. Records pertaining to security and intelligence activities which are of permanent or long-time value include civilian and military intelligence files, and files pertaining to alert, emergency, defense, disaster, and relief plans or studies.

b. INTELLIGENCE FILES OF GOVERNMENT-OWNED, CONTRACTOR-OPERATED PLANT EMPLOYEES. When a Government-owned, contractor-operated plant is closed or placed on a standby status, all individual intelligence files of contractor employees no longer employed which are in the custody of the War Department are shipped to the Discontinued Projects Branch, AGO.

78. Special Handling of Files

The personnel files, including questionnaires, 201 correspondence files, basic personnel records (WD PMGO Form 3, or similar forms), prisoner of war classification card (WD AGO Form 20, or similar forms), individual pay data card, individual deposit book, and similar records of captured enemy personnel and interned enemy aliens, will be forwarded on repatriation of the prisoner of war or civilian internee to The Provost Marshal General's Office (ATTENTION: Prisoner of War Information Bureau) for processing prior to retirement to the War Department Records Branch, AGO.

79. Disposal Standards

a. Indexes and card files on: individuals responsible for safes; criminal records of personnel; undesirable personnel; information pertaining to confidential investigations of employees; release of classified drawings and specifications.

Destroy on supersession, or when obsolete.

b. Files and indexes on passes issued, visitors' permits and registers including authority for visit, permission to take photographs, issuance of automobile permits.

Destroy on supersession, or when obsolete.

c. Guard reports, assignments, and marksmanship records.

Destroy after 1 year.

d. Injury and accident reports, with related correspondence and records, pertaining to plant and motor vehicle accidents (such as

WD AGO Forms 501, 502, 503, 504, 506, 508, 509, and similar forms).

Destroy after 1 year.

e. Security and safety literature, instructions, directives, and records pertaining to safety training courses and first aid classes.

Destroy on supersession, or when obsolete.

f. Safety inspection reports, fire and fire drill reports and related correspondence; records on fire department activities, fire hazards, and authority to use open flame or heat-producing equipment (exclusive of post engineer files).

Destroy after 1 year.

g. Occupational Hazards Records, such as reports and charts on TNT poisoning and dermatitis cases, and papers relating to the periodic examination of individuals to determine ability to perform certain kinds of work.

Destroy after 1 year.

Section XXV. SUPPLY

80. Permanent Files

Records of long-time or permanent value which relate to supply operations fall into three categories: (1) contract property accounts, which, in contrast to military property accounts, reflect the quantities of property owned by the government and administered by the War Department, furnished to War Department contractors under contract, and the consumption, disposition, or other accounting for property so furnished, as defined in AR 35-6700; (2) military property accounts covering property furnished to foreign governments under authority of the Lend-Lease Act as defined in AR 35-6700; and (3) monthly (or longer-time period) stock summary reports reflecting the over-all supply movements to and from supply establishments. The disposition of the records under (1) above, will be as provided for other records of the contract or contracts to which they relate after the audit and clearance of any discrepancies in certificates of audit.

81. Disposal Standards

a. GENERAL. Inventory and Adjustment Files or Documents, filed at the station or installation headquarters (and not filed as a voucher to an accountable officer's file) such as, inventory adjustment reports, reports of survey, and similar documents, and attachments thereto, which relate to an inventory of supplies and adjustments to property accounts, *except for files and documents pertaining to lend lease, reciprocal aid, and civilian supply.*

Destroy after 3 years.

(*See also* pars. 69 and 70.)

b. UNIT AND ORGANIZATIONAL SUPPLY. Property Records, consisting of company property books; jacket files containing records such as requisitions, property issue and turn-in slips, statements of charges, reports of survey, adjustment vouchers, shipping tickets and documents, tally slips; other documents forming a part of a nonaccountable property account, including reports and correspondence relating thereto.

Destroy after approval by the post, camp, station, or similar installation commander after annual inspection, provided no administrative action is required by the inspector's report; or destroy on inactivation or disbandment after examination of the company property books as directed by AR 35-6700.

c. OFFICE OR "HOUSEKEEPING" SUPPLIES AND PROPERTY. (1) Property Accounting Records, which relate to the receipt, storage, issue of property for use within the station or installation (that is, station complement and housekeeping property) consisting of stock record cards, copies of purchase orders, property turn-in and issue slips, memorandum receipts, shipping documents, tallies, and other documents filed with vouchers to a stock record account.

Destroy 2 years after audit and clearance.

(2) Memorandum Receipt Jacket File, consisting of property issue and turn-in slips, memorandum receipts, and related papers filed with memorandum receipts maintained as a record of station or installation property held on memorandum receipt, *but not to include such documents filed with vouchers to the stock record account.*

Destroy on turn-in of equipment, on consolidation, or other proper settlement of accountability.

(3) Records relating to the receipt and issue of military property when not recorded on an accountable stock record account of the instal-

lation (this applies to installations which do not maintain an accountable stock record account) or on a Memorandum Receipt account of the installation consisting of stock cards, issue and turn-in slips, shipping documents, copies of purchase orders, tallies.

Destroy after 2 years or on turn-in of equipment, other proper settlement of responsibility, or on consolidation, whichever is applicable.

d. STATION SUPPLY. The term "station" as used herein refers to posts, camps, stations, Army Air Forces bases and fields, and other installations directly supplying troops.

(1) Stock Record and Stock Control Account, vouchers, and supporting documents and attachments thereto, consisting of stock record cards or any equivalent forms used in lieu thereof, and documents such as shipping documents, requisitions, purchase requests, copies of purchase orders, property issue and turn-in slips, inventory adjustment reports, reports of survey and other papers filed with vouchers to the Stock Record Account, and including registers of vouchers to the stock account or comparable registers, *except records relating to contract property, lend-lease, reciprocal aid, and civilian supply.*

Destroy 2 years after audit and clearance.

(2) Memorandum Receipt Jacket File, consisting of property issue and turn-in slips, memorandum receipts, *but not to include documents filed with vouchers to the Stock Record Account.*

Destroy on turn-in of equipment, on consolidation, or other proper sertlement of accountability.

(3) Due-In or Notice of Shipment Files or Documents, consisting of requisitions, shipping orders, copies of purchase orders, shipping documents and tickets, and other documents retained by a Station Supply Branch as a record of due-in shipments, as a notification of shipment, or for purposes of warehouse space utilization planning, *but which are not filed with vouchers to the Stock Record Account.*

Destory 3 months after receipt of incoming shipment.

(4) Station Supply Reports and correspondence relating thereto, consisting of station stock status reports, reports on status of equipment, or comparable reports and correspondence on the status of supply, excess stock, and redistribution of stock.

Destroy after 2 years.

(5) Salvage Property File consisting of property turn-in slips, reports of survey, War Department Shipping Documents, tally-ins, tally-outs, and other papers filed in the salvage property file including stock record cards, registers, card indices and similar control devices, *but exclusive of salvage contract files* and contract property files as defined in AR 35-6700.

Destroy 2 years after audit and clearance of accountable officers property account to which file relates, and provided audit examination required by TM 14-1010 has been completed.

(6) Packing, Crating, and Shipping Specifications, correspondence, and papers relating thereto.

Destroy on supersession, or when obsolete.

e. DEPOT SUPPLY. The term "depot" as used herein refers to all supply establishments of ASF technical services and the Army Air Forces, maintained for the storage and issue of supplies, as distribution, key, port stock, filler, and reserve depots, and comparable establishments in theaters of operations and commands outside the continental limits of the United States.

(1) Due-In or Notice of Shipment Document Files, consisting of documents indicating due-in shipments, such as: copies of contracts, change orders, purchase orders, or supplemental agreements; copies of shipping orders, delivery orders, or distribution orders; copies of vendor's shipping documents or War Department Shipping Documents, constituting notices of shipments; wire report of shipments; copies of purchase orders covering depot procurement; or any comparable document retained by a depot as a notice of shipment, and including Due-In Document Registers, or any register used for a comparable purpose.

Destroy 3 months after receipt of shipment.

(2) Car Arrival Reports, or comparable documents utilized for the purpose of initiating diversions of shipments or immediate reshipment.

Destroy 3 months after accomplishment of diversion or reshipment.

(3) Stock Record and Stock Control Account vouchers, and supporting documents and at-

tachments thereto, consisting of Stock Record Cards or any equivalent forms used in lieu thereof, and consisting of files as follows (*specifically excluded from this coverage are records relating to contract property and lend-lease, reciprocal aid, and civilian supply transactions*):

(*a*) Debit Voucher File, consisting of shipping documents, discrepancy reports, copies of purchase orders, packing lists, shipping tickets, property turn-in slips, or other documents filed with vouchers to a Debit Voucher File.

(*b*) Inventory and Stock Record Adjustment Voucher File, consisting of inventory adjustment reports, reports of survey, and other stock record adjustment vouchers, or other documents constituting adjustment vouchers to the Stock Record Account.

(*c*) Requisition Files (or Credit Voucher File) consisting of requisitions or shipping orders, substitution advices, extract requisitions, cancelation advices, purchase requests, War Department Shipping Documents, and other documents filed in a Requisition File supporting action taken on a requisition or shipping order.

(*d*) Unserviceable Property File, consisting of War Department Shipping Documents, or comparable documents which are filed in an Unserviceable Property File as a record of property held pending repair, reclamation.

(*e*) Stock Record Voucher Files, which constitute a combination of any of the above.

(*f*) Stock Accounting and Stock Control Registers, such as debit voucher registers, stock record adjustment voucher registers, requisition control and credit voucher registers, or other registers maintained for comparable purposes.

Destroy 2 years after audit and clearance.

(4) Salvage Property File consisting of property turn-in slips, reports of survey, War Department Shipping Documents, tally-in, tally-out, and other papers filed in the salvage property file including stock records cards, registers, card indices and similar control devices, but exclusive of salvage contract files and contract property files as defined in AR 35-6700.

Destroy 2 years after audit and clearance of the accountable officer's property account to which the file relates, and provided audit examination required by TM 14-1010 has been completed.

(5) Shortage Report File, consisting of reports transmitted by the depot to a technical service stock control point by air mail, teletype, or other means, for determination of a secondary source of supply.

Destroy after 3 months.

(6) Advice of Availability File, consisting of reports by a technical service stock control point to a depot by air mail, teletype, or other means, indicating a secondary source of supply for items appearing on a shortage report.

Destroy after 3 months.

(7) Requisition Files, consisting of requisitions, correspondence, and other papers relating thereto, *but exclusive of such documents*—

(*a*) When accountability is involved;

(*b*) When in direct support of a purchase transaction;

(*c*) When filed in a due-in or notice of shipment document file;

(*d*) When retained for warehousing purposes in connection with the receipt or shipment of supplies; or

(*e*) When relating to lend-lease, reciprocal aid, and civilian supply.

Destroy after 3 months.

(8) Stock Catalog Files, consisting of master stock catalog card files and other papers which relate to the assignment and use of stock numbers and nomenclature.

Destroy on supersession, or when obsolete.

(9) Tables of Organization, Equipment, Basic Allowances, or comparable tables or lists which govern the issue of equipment and supplies to units and organizations.

Destroy on supersession, or when obsolete.

(10) Electrical Accounting Machine Card Files, which reflect stock transactions affecting the stock status of supply establishments.

Destroy on supersession, or when obsolete.

(11) Supply Reports, which reflect the movement of supplies and the stock status of supply establishments, such as stock status reports, excess stock reports, stock analysis reports, and related correspondence, *but exclusive of daily availability listings and monthly stock summaries (or longer time-period stock summaries)*.

Destroy after 2 years.

(12) Daily Availability Listings.

Destroy after 3 months.

(13) Inventory and Reconciliation Stock Balance Sheets, or comparable work papers used for purposes of inventory, reconciliation, or adjustment of stock balances.

Destroy in 6 months, or on completion of next inventory, reconciliation, or adjustment, whichever is applicable.

(14) Warehouse Planning and Lay-out Files or Documents, consisting of warehouse, shed, or open storage space planning and lay-out diagrams, or comparable papers relating to space planning or lay-out.

Destroy on supersession, or when obsolete.

(15) Locator Record Files or Documents, consisting of locator sheets, cards, tags, such as space control sheets, location sheets, location cards, bin tags, and other papers constituting a part of a location system for supplies and equipment, or utilized as a check or inventory of stock location.

Destroy on supersession, or when obsolete.

(16) Storage Registers, such as voucher assignment registers, shipping control registers, tally number registers, and comparable devices maintained for storage control purposes.

Destroy after 1 year.

(17) Memorandum Receipt Jacket File, for installation property held on memorandum receipt consisting of property issue slips, property turn-in slips, memorandum receipts, and related papers filed with memorandum receipts, *but not to include such documents filed as vouchers to a stock record account.*

Destroy on turn-in of equipment, on consolidation, or other proper settlement of accountability.

(18) Warehouse Receiving Files or Documents, consisting of car arrival reports, War Department Shipping Documents, tallies, or comparable documents retained for the purpose of car spotting, for the assignment of labor and equipment, for unloading of supplies, and other purposes in connection with the receipt of supplies at depot warehouses.

Destroy 3 months after receipt of shipment.

(19) Warehouse Shipping Files or Documents, consisting of War Department Shipping Documents, tallies, reports of outbound freight cars, work assignment sheets used for stock picking, copies of stock or packing tags, or comparable documents retained by the warehouse after shipment and utilized for the purpose of picking, packing, and loading stock for shipment.

Destroy 3 months after shipment.

(20) Labor Pool and Equipment Operating Files, consisting of records relating to the assignment and utilization of labor and equipment for warehousing activities, such as work assignment sheets, working reports of the operation of materials handling equipment, daily work reports showing such information as the date, shift, cars or trucks loaded or unloaded, and comparable operational papers.

Destroy after 6 months.

(21) Storage Reports, consisting of depot space and operating reports, monthly materials handling reports, or comparable reports relating to over-all storage operations and made to higher headquarters.

Destroy after 2 years.

(22) Reference Files of Standard Nomenclature Lists, Interchangeable Stock Numbers, standard stock catalogs, supply catalogs, and similar supply reference aids.

Destroy on supersession, or when obsolete.

(23) Packing Specifications Files, consisting of packing manuals, lists, bulletins, and other issuances which relate to packing, packaging, and crating instructions and specifications.

Destroy on supersession, or when obsolete.

Section XXVI. TRANSPORTATION

82. Permanent Files

Car record books, constituting a record of every car handled and containing information necessary to check demurrage bills and agreement abstracts submitted by carriers in support of bills, are maintained in offices of transportation officers in accordance with AR 55-175 and constitute long-time or permanent records.

83. Disposal Standards

a. Operating Records. (1) Property Received and Property Shipped Bill of Lading

Files, consisting of freight bills, bills of lading, War Department Shipping Documents, express receipts, tally sheets, way bills, dray tickets, holding orders, diversion orders, switching orders, demurrage reports, and other papers relating thereto, *excluding bills of lading and supporting documents on which a claim is outstanding and such files and documents pertaining to lend-lease, reciprocal aid, and civilian supply shipments, and to shipments of property of lend-lease governments by United States Army installations.*

Destroy after 5 years.

(2) Household Shipment Files, consisting of bills of lading, travel orders, and supporting documents relating to shipment, receipt, packing, crating, and storage of household goods and personal effects.

Destroy 5 years after completion of shipment.

(3) Transportation Requests and Meal Ticket Files or documents, consisting of retained copies of transportation requests or meal tickets, transportation certificates for passenger travel, travel orders, correspondence, and other papers relating to the issue of transportation requests and meal tickets.

Destroy after 5 years.

(4) Cancelled Bills of Lading, Transportation Request and Meal Ticket Files, consisting of retained copies of canceled bills of lading, transportation requests or meal tickets, correspondence, and other papers filed therewith.

Destroy after 5 years.

(5) Army Reservation Bureau Records, consisting of applications and requests for reservations and accommodations, and card indexes, correspondence, reports, and related documents pertaining thereto.

Destroy applications and requests for reservations and accommodations after 6 months or on inactivation; destroy all other records after 2 years, or on inactivation.

(6) Reports of Approved Transportation Requests, such as monthly reports of approved transportation requests or comparable reports made to a higher headquarters.

Destroy after 2 years, or on inactivation.

(7) Car Control Records and Reports, which reflect cars en route, received, placed, loaded, unloaded, dispatched, and the amount of freight to be moved, such as car situation reports, tank car reports, car movement reports, freight car requirement reports, and similar car control records relating thereto, *but exclusive of car record books as described in paragraph 82.*

Destroy after 6 months.

(8) Confirmations on route orders and ODT Unit Permits issued by the Office of the Chief of Transportation.

Destroy after 5 years.

(9) Storage-in-transit Files or Documents, consisting of Transit Reshipping Certificates, Records of Transit Freight Bill and Tonnage Credits, and other documents relating thereto.

Destroy after 5 years.

(10) Tariff, rate and routing publications.

Destroy on supersession, or when obsolete.

b. Records Relating to the Issue of Blank Forms. (1) Transportation Requests, Bills of Lading, and Meal Ticket Requisition Files, consisting of: requisitions for accountable transportation forms (transportation requests, transportation requests identification cards, bills of lading, and meal tickets, which are subject to special control by reason of accountability for such forms); acknowledgments of the receipt of such documents; correspondence and other papers which relate to the accountability for such forms, providing listings, receipt cards, registers, or similar control devices are maintained showing the receipt and disposition of such forms.

Destroy after 5 years, if listings, etc., are maintained; if not, destroy as for (2) below.

(2) Listings, Receipt Cards, Registers, or similar control devices showing the issue or receipt of blank transportation accountable forms, that is, transportation requests, transportation requests identification cards, bills of lading, and meal tickets which are subject to special control by reason of the monetary value of the forms.

Destroy after 10 years.

APPENDIX I
LOCATION AND ADDRESSES OF RECORDS DEPOTS AND DEPOSITORIES

1. Service Command Records Depots

Command	*Location and addresses*
1st Service Command	808 Commonwealth Avenue, Boston 15, Massachusetts
2d Service Command	Teaneck Armory, Teaneck & Liberty Roads, West Englewood, New Jersey
3d Service Command	601 South Haven Street, Baltimore 24, Maryland
4th Service Command	Commanding General, Fourth Service Command, Atlanta 3, Georgia (ATTENTION: Records Administrator)
5th Service Command	Fort Hayes, Columbus 18, Ohio
6th Service Command	Butler Building, 111 North Canal Street, Chicago 6, Illinois
7th Service Command	16th and Cuming Streets, Omaha 2, Nebraska
8th Service Command	San Antonio Army Service Forces Depot, Grayson Street Station, San Antonio 8, Texas
9th Service Command	Scowcroft Building, Ogden, Utah
Military District of Washington	War Department Records Branch, AGO 219 North Lee Street, Alexandria, Virginia

2. Oversea Records Depots

AFRICA—ASIA

Africa—Middle East Theater: Headquarters Records Depot	APO 787, c/o Postmaster New York, N. Y.
Subdepots	West African Service Command APO 606, c/o Postmaster New York, N. Y.
	North African Service Command APO 600, c/o Postmaster New York, N. Y.
Persian Gulf Service Command	Records Depot APO 523, c/o Postmaster New York, N. Y.
USAF, India Burma Theater (includes all organizations serving in China)	Central Records Depot Base General Depot No. 2 APO 465, c/o Postmaster New York, N. Y.

AMERICA—NORTH, SOUTH, AND CENTRAL

Command	*Location and addresses*
Alaskan Department	Records Depot APO 942, c/o Postmaster Seattle, Washington
Antilles Department	Records Depot APO 851, c/o Postmaster Miami, Florida
Bermuda Base Command	Records Depot APO 856, c/o Postmaster New York, N. Y.
Greenland Base Command	Records Depot APO 858, c/o Postmaster New York, N. Y.
Iceland Base Command	Records Depot APO 860, c/o Postmaster New York, N. Y.
Newfoundland Base Command	Records Depot APO 862, c/o Postmaster New York, N. Y.
Panama Canal Department	Records Depot APO 834, c/o Postmaster New Orleans, Louisiana

EUROPE

USF, European Theater	AG Inactive Records Depot (Prov.) APO 562, c/o Postmaster New York, N. Y.
USAF, Mediterranean Theater of Operations	MTOUSA Records Depot APO 512, c/o Postmaster New York, N. Y.

PACIFIC

USAF, Pacific	Central Records Depot No. 1
Australia and that portion of New Guinea south of and including Lae:	Headquarters, Australian Base Section, AFWESPAC, APO 923, c/o Postmaster San Francisco, California
All other areas under AFWESPAC	Central Records Depot No. 2 AG Field Unit APO 75, c/o Postmaster San Francisco, California
Hawaiian Department and AFMIDPAC	Central Records Depot No. 3 Headquarters, USAFPOA, APO 958, c/o Postmaster San Francisco, California

3. War Department Records Depositories

Depository	*Location and address*
War Department Records Branch, AGO	219 North Lee Street Alexandria, Virginia
Demobilized Personnel Records Branch, AGO (except World War I section)	4300 Goodfellow Boulevard St. Louis 20, Missouri.
Discontinued Projects Branch, AGO	911 Douglas Street Omaha 8, Nebraska
Contract Records Branch, AGO	4300 Goodfellow Boulevard St. Louis 20, Missouri
AAF Contract Records	Wright Field, Dayton, Ohio
AAF Still Photographic Records	Photographic Division, AC/AS Intelligence, Army Air Forces Washington 25, D. C.
AAF Motion Picture Photographic Records	Motion Picture Services Division, AC/AS Intelligence, Army Air Forces 1 Park Avenue, New York, N. Y.
Signal Corps Still Photographic Records	Army Pictorial Service Office of the Chief Signal Officer Washington 25, D. C.
Signal Corps Motion Picture Photographic Records	Signal Corps Photographic Center Office of the Chief Signal Officer, 35-11 35th Avenue Long Island City, New York
Organization Records Branch, AGO	Savannah Army Service Forces Depot, Savannah, Georgia
Demobilized Personnel Records Branch, AGO (World War I section)	209 South Main Street, High Point, North Carolina.
Clinical Records Branch, AGO	4300 Goodfellow Boulevard St. Louis 20, Missouri
Records Service Branch, AGO	4300 Goodfellow Boulevard St. Louis 20, Missouri

APPENDIX II

ALLOCATIONS TO SERVICE COMMAND RECORDS DEPOTS

1. Units

a. General. Within the continental United States, noncurrent files of provisional units, bulk allotment units, permanent party (ZI) T/O units of Army Air Forces, student training regiments, OCS regiments, replacement training regiments, and similar units pertinent to the activities listed below, but exclusive of T/O units as defined in paragraph 3, will be transferred to the appropriate ASF service command records depot as indicated in paragraphs 2 through 4, below.

b. Army Service Forces. (1) Army Service Command units organized under an authorization of personnel issued by the commanding general of the service command. Activities coming within the scope of this designation are illustrated as follows:

Station complement
Service command district offices
Recruiting and induction stations
Separation centers
Reception stations
Special training units
Redistribution stations
Oversea replacement depots
Processing centers
Disciplinary barracks
Rehabilitation centers
Recreation camps and areas
Training centers and schools
Convalescent hospitals
Station medical activities
Maintenance shops
POW camps
AG depots
Laundries
Laboratories

(2) Technical service units, that is, units organized under authorizations of personnel issued by the chief of an ASF technical service. Activities coming within the scope of this designation are as follows:

Station complement
Training centers
Schools
(Government-owned manufacturing plants)
Proving grounds
Depots, arsenals, remount depots
Motor bases
Maintenance shops
Ports
Staging areas
Laboratories
Boards
Area engineer offices and construction projects

c. Army Ground Forces.

AGF Schools
Boards
Centers
Replacement Training Centers
Advance Replacement Centers
Replacement and School Command
Replacement Depots
Training Centers

d. Army Air Forces. (1) Army Air Forces base units as defined in AAF Regulations 20-52, that is, those which the commanding general or commanding officer of an AAF command designates and organizes with permanent party personnel to operate a base or other establishment or activity under the jurisdiction of the AAF command.

(2) Permanent party (ZI) T/O units including both those subsequently redesignated as AAF base units and those for which no AAF base unit was substituted.

2. Army Ground Forces

Noncurrent files of Army Ground Forces as indicated below will be transferred to the Service Command Records Depot as follows:

AGO 2596A

Army Ground Forces activity	*Location*	*SvC*
Hq. Replacement & School Command	Birmingham, Alabama	2d
Infantry Replacement Training Center	Camp Gordon, Georgia	
Infantry Replacement Training Center	Camp Howze, Texas	
Infantry Replacement Training Center	Camp Croft, S. C.	
Infantry Replacement Training Center	Camp Blanding, Florida	
Infantry Replacement Training Center	Camp Fannin, Texas	
Infantry Replacement Training Center	Camp Hood, Texas	
Infantry Replacement Training Center	Camp Livingston, La.	
Infantry Replacement Training Center	Camp Maxey, Texas	
Infantry Replacement Training Center	Fort McClellan, Alabama	
Infantry Replacement Training Center	Camp Roberts, California	
Infantry Replacement Training Center	Camp Jos. T. Robinson, Ark.	
Infantry Replacement Training Center	Camp Rucker, Alabama	
Infantry Replacement Training Center	Camp Wheeler, Georgia	
Infantry Replacement Training Center	Camp Wolters, Texas	
Infantry Advanced Replacement Training Center	Camp Shelby, Mississippi	
Field Artillery Replacement Training Center	Fort Bragg, N. C.	
Field Artillery Replacement Training Center	Fort Sill, Oklahoma	
Cavalry Replacement Training Center	Fort Riley, Kansas	
Armored Replacement Training Center	Fort Knox, Kentucky	
Tank Destroyer Replacement Training Center	Camp Hood, Texas	
AGF Replacement Depot No. 1	Fort George G. Meade, Md.	3d
Headquarters Armored Center	Fort Knox, Kentucky	4th
Armored Board	Fort Knox, Kentucky	
Headquarters Airborne Center	Camp MacKall, N. C.	
Airborne Board	Camp MacKall, N. C.	
Armored School	Fort Knox, Kentucky	6th
Cavalry School	Fort Riley, Kansas	
Coast Artillery School	Fort Monroe, Virginia	
Field Artillery School	Fort Sill, Oklahoma	
Infantry School	Fort Benning, Georgia	
Parachute School	Fort Benning, Georgia	
Tank Destroyer School	Camp Hood, Texas	
Cavalry Board	Fort Riley, Kansas	
Coast Artillery Board	Fort Monroe, Virginia	
Field Artillery Board	Fort Bragg, N. C.	
Infantry Board	Fort Benning, Georgia	
Rocket Board	Fort Sill, Oklahoma	
AGF Replacement Depot No. 3	Fort Riley, Kansas	
Headquarters Tank Destroyer Center	Camp Hood, Texas	8th
Tank Destroyer Board	Camp Hood, Texas	
Headquarters Antiaircraft Command	Fort Bliss, Texas	
Antiaircraft Replacement Training Center	Fort Bliss, Texas	
Antiaircraft School	Fort Bliss, Texas	
Antiaircraft Board	Fort Bliss, Texas	
Landing Vehicle Board	Fort Ord, California	9th
AGF Replacement Depot No. 2	Fort Ord, California	
1st Hq. & Hq. Detachment Special Troops, AGF	Fort Ord, California	

3. Army Air Forces

a. Noncurrent files of the Army Air Forces will be transferred to specified ASF service command records depots upon the basis of the particular air force or AAF command affected rather than upon the basis of geographical lo-

cation. Allocation to ASF service command records depots is indicated below:

AAF command	*Designated ASF Service Command Records Depot*
Air Technical Service Command Headquarters, Wright Field Dayton, Ohio	5th
Fairfield ATSC Fairfield, Ohio	5th
Atlantic Overseas ATSC Newark, New Jersey	2d
Rome ATSC Rome, New York	2d
Middletown ATSC Middletown, Pennsylvania	3d
Miami ATSC Miami, Florida	4th
Mobile ATSC Mobile, Alabama	4th
Warner Robins ATSC Warner Robins, Georgia	4th
Oklahoma City ATSC Oklahoma City, Oklahoma	8th
San Antonio ATSC San Antonio, Texas	8th
Ogden ATSC Ogden, Utah	9th
Pacific Overseas ATSC Oakland, California	9th
Sacramento ATSC Sacramento, California	9th
San Bernardino ATSC San Bernardino, California	9th
Spokane ATSC Spokane, Washington	9th
AAF Training Command Headquarters Fort Worth, Texas	8th
Eastern Flying Trng Comd Maxwell Field, Alabama	8th
Central Flying Trng Comd Randolph Field, Texas	8th
Western Flying Trng Comd Santa Ana, California	8th
Eastern Tech Trng Comd St. Louis, Missouri	8th
Western Tech Trng Comd Denver, Colorado	8th
Air Transport Command North Atlantic Division Manchester, New Hampshire	1st
Caribbean Division West Palm Beach, Florida	3d
Ferrying Division Cincinnati, Ohio	6th
Alaskan Division Edmonton, Canada	7th
Pacific Division, West Coast Wg. San Francisco, California	9th
502 Field Division Washington, D. C.	MDW
Army Air Forces Center Orlando, Florida	4th
I Troop Carrier Command Stout Field, Indiana	6th
AAF Personnel Distribution Center Louisville, Kentucky	2d
Headquarters, Continental Air Forces Bolling Field, Washington, D. C.	War Department Records Branch
First Air Force Mitchell Field, New York	2d
Second Air Force Colorado Springs, Colorado	7th
Third Air Force Tampa, Florida	4th
Fourth Air Force San Francisco, California	9th
AAF Weather Wing Asheville, North Carolina	4th
Army Airways Comm System Asheville, North Carolina	4th

b. Several of the AAF commands listed in *a above*, include base units located in oversea theaters and commands, as well as in the continental United States. The close relationship between the files of such headquarters, both zone of the interior and oversea, requires that their noncurrent files be centralized in one records depot. Accordingly, noncurrent files of base units of the commands listed below will be transferred to the service command records depot indicated. Oversea records depots in effecting the return of such files to the United States will direct shipment to the selected ASF service command records depot and not to Organization Records Branch, AGO, Savannah ASF Depot, Savannah, Georgia.

AAF Command affected	*Oversea Records Depots affected*	*Service Command Records Depot*
*Alaskan Division ATC	Alaskan Department Northwestern Service Command	7th SvC
*North Atlantic Division ATC	Newfoundland Base Command Iceland Base Command Bermuda Base Command Greenland Base Command	1st SvC
Caribbean Division ATC	Antilles Department Panama Canal Department	3d SvC
Pacific Division ATC	Pacific Ocean Areas Southwest Pacific Area	9th SvC
Army Airways Communications System AAF	(As applicable)	4th SvC
AAF Weather Regions	(As applicable)	4th SvC

4. Army Service Forces

Except as provided in this paragraph noncurrent files of installations of the Army Service Forces will be transferred to the records depot of the ASF service command in which the installation is geographically located.

a. Noncurrent files of the District Engineer Offices listed below will be transferred to the service command records depot designated. This will result in centralizing in the records depot serving a particular Division Engineer Office, the noncurrent files of Engineer district offices over which the Division exercised jurisdiction.

District Engineer Office	*Location*	*Designated Service Command Records Depot*
Philadelphia District	Philadelphia, Pa.	2d
Washington District	Washington, D. C.	3d
New Orleans District	New Orleans, La.	4th
Nashville District	Nashville, Tenn.	5th
Pittsburgh District	Pittsburgh, Pa.	5th
Buffalo District	Buffalo, N. Y.	6th
Duluth District	Duluth, Minn.	6th
U. S. Lake Survey District	Detroit, Mich.	6th
Fort Peck District	Fort Peck, Mont.	7th
Rock Island District	Rock Island, Ill.	7th

b. Files of suboffices established by a parent office or installation in the continental United States and under the direct administrative supervision and jurisdiction of the parent office or installation will normally be retired to the ASF service command records depot (or, for the Military District of Washington, the War Department Records Branch, AGO) serving the parent office or installation. Such suboffices may be designated as class IV installations or as "subclass IV installations," and they may operate under a parent field installation or directly under a Washington headquarters office.

(1) The following are illustrative of suboffices of field installations of ASF technical services to whose noncurrent files the above rule will apply:

(*a*) Noncurrent files of Project Offices of the Corps of Engineers will be transferred to the records depot serving the affected District Engineer Office.

(*b*) Branch Offices and Regional Offices of the Ordnance Department will transfer noncurrent files to the records depot serving the parent Ordnance District.

(*c*) Subports of Embarkation of the Transportation Corps, as listed below, will transfer files to the records depot serving the parent port:

*Base units in these divisions will transfer noncurrent files after screening direct to the service command records depot indicated and not through the records depot in the affected oversea theater or command.

APPENDIX III

REFERENCES TO DIRECTIVES AND PUBLICATIONS

1. Purpose

This manual contains in a number of places general references to directives and publications of the War Department. In this section these are specifically cited under appropriate subject headings, together with others which are deemed most fundamental and pertinent to the records administration program.

2. General References

a. WD Circular 177, 1944, Microfilming of Records for Purposes of Preservation, outlines the procedures for the economical and proper utilization of microphotography in record keeping and indicates the limitations of this technique.

b. WD Circular 104, 1945, which prescribes and defines the standard records shipping and storage box, is implemented by *section II, WD Circular 173,* 1945, Locker Box, which removes property accountability for such boxes. *WD Memorandum W 345-15-43,* 1943, Use of 201 Files and other Personnel Records of Officers and Enlisted Men, provides for the loan, under certain conditions, of individual personnel files to offices of the War Department and other specified headquarters of major forces and commands.

c. Additional directives pertinent to records of long-time or permanent value are *AR 345-105,* Historical Records and Histories of Organizations, and *AR 310-50,* Orders, Bulletins, Circulars, and Memoranda, which provides for the forwarding of record sets of directives, etc., promulgated by specified commands to The Adjutant General. *WD Memorandum W 345-21-43,* 1943, Military History of the Second World War, should also be consulted.

d. FM 21-6, List and Index of War Department Publications, is a useful guide to existing publications.

3. Civilian Personnel Records

a. The War Department policy that a single personnel folder (201 file) be maintained for each civilian employee of the War Department was announced in *Civilian Personnel Circular 3,* 1943. *Civilian Personnel Circular 44,* 1944, prescribes a similar procedure for employees serving outside the continental United States.

b. Other important War Department directives pertinent to records of civilian personnel are: *Civilian Personnel Circular 93,* 1944, Loyalty Investigations; *Civilian Personnel Circular 96,* 1944, "Disposition of Medical Files Maintained Under The Army Industrial Program; *Civilian Personnel Circular 135,* 1944, Standard Forms and Methods for Time and Attendance Reports and Leave Accounts; *Civilian Personnel Circular 54,* 1945, Disposition of Personnel, (201), Medical, and Intelligence Files of Civilian Employees of the War Department in Military, Naval, or Merchant Marine Service; *Finance Bulletin 18,* 1945, which requires disbursing officers to cooperate with certifying officers in determining the status of the General Accounting Office audit of pertinent accounts for years prior to and including 1942; and *TM 30-218* which relates to counter-intelligence investigative reports of all personnel employed in the War Department.

4. Financial Records

a. TM 14-702, Fiscal Accounting for Field Installations, which provides for a uniform system of accounts and reports, is an important source of information concerning the fiscal records of the Army. *TM 14-500,* Organization and Functions of Disbursing Offices, and *TM 14-506,* Finance Service in Mobile Field Units, are also valuable references to fiscal procedures and records of this type.

b. Section II, WD Circular 231, 1945, provides for the disposition of fiscal accounting records upon discontinuance of field installations.

c. Section I, WD Circular 90, 1945, directs that a 10-day notice be given prior to abandon-

Subport of Embarkation	*Service Command Records Depot to which assigned*
Halifax Subport of Embarkation Halifax, Nova Scotia	1st SvC
Juneau Subport of Embarkation Juneau, Alaska	9th SvC
Montreal Subport of Embarkation Montreal, Quebec	1st SvC
Prince Rupert Subport of Embarkation Prince Rupert, B. C., Canada	9th SvC
Philadelphia (cargo) Subport of Embarkation	2d SvC

5. Special Installations

The noncurrent files of special installations will be transferred to the records depot of the ASF service command in which the installation is geographically located.

6. Specialized Files

Provisions of paragraphs 1 through 5 above, will not be construed as affecting in any way the requirements respecting the handling of specialized files.

AGO 2596A

U. S. GOVERNMENT PRINTING OFFICE: 1945

ment of an installation to effect an audit of accounts. Procedures for auditing property accounts are set forth in *AR 35-6740,* Auditing Property Accounts.

d. The following directives pertain to nonappropriated fund activities: *AR 210-50,* Nonappropriated Funds; *AR 210-65,* Army Exchanges; *AR 210-100,* Post Restaurants and Nonappropriated Funds for Civilians; and *AR 210-390,* Motion Picture Service.

e. For disposition of Reports of Survey, see *AR 35-6640,* Accounting for Lost, Damaged, and Destroyed Property.

5. Military Personnel Records

a. Military personnel records are prepared and distributed in accordance with the particular directives providing for the use of each kind of record. *WD Circular 96,* 1945, as amended by *section VI, WD Circular 123,* 1945, and *section IV, WD Circular 189,* 1945, establishes the "field military 201 file" and describes the disposition of specific papers filed therein. Procedures relating to personnel records at various types of installations or under specific circumstances are covered in such publications as: *TM 12-221,* Armed Forces Induction Stations Operations; *TM 12-222,* Separation Center Operations; *TM 12-223,* Reception Center Operations; *TM 12-230,* Service Record; *TM 12-235,* Enlisted Personnel: Discharge and Release from Active Duty (other than at Separation Centers); *TM 12-238,* Enlisted Personnel Retirement; *TM 12-240,* Deceased Personnel Within the United States, Excluding Alaska; and *TM 12-425,* Personnel Classification.

b. The following are examples of directives which have a bearing on records of military personnel: *section I, WD Circular 71,* 1944, Accounts—Military and Civilian Personnel missing, missing in action, captured, or interned; *WD Circular 290,* 1944, Procedures for Purchase and Issuance of United States Savings Bonds; *WD Circular 382,* 1944, Naturalization of Noncitizens Serving in the Army of The United States; *AR 25-20,* Claims, Investigation of Accidents, General Provisions; *AR 35-5520,* Allotments of Pay; *AR 35-5560,* Notification to Allotment Offices upon Death, etc.; *AR 140-5,* Reserve Officers not General Officers; *AR 340-15,* Correspondence; *AR 345-5,* Personnel Management—Personnel Records; *AR 615-275,* Authorized Absence of EM; *AR 615-360 to 369,* pertaining to discharge or release from active duty of EM; *Readjustment Regulations 1-1, 1-4, and 1-5;* and "A Manual for Courts Martial, U. S. Army, 1928."

6. Procurement and Contracting

a. The statute of limitations on claims or demands against the United States, available for reference in *AR 35-730,* is fundamental to War Department policy on preservation of contract records.

b. The "Contract Settlement Act of 1944" (Public Law 395, 78th Congress), which is published as appendix B to the "Joint Termination Regulation," requires the preservation of contractor's records. Regulations are issued from time to time directing the retention of certain types of contract records. Reference should be made, for example, to the "Joint Termination Regulation" which requires retention of certain records on termination of contracts. Certain regulations issued by the Office of Contract Settlement under Public Law 395 establish minimum retention periods for both contractor and contracting agency records.

c. Two other War Department directives are basic references with relation to the records administration program: *AR 35-6700* specifically excepts contract property records from the provisions governing disposal of military property accounts. *Section IV, WD Circular 392, 1944,* Controlled Materials Plan, requires retention of basic records in this category.

7. Supply and Transportation

a. For a definition of "property records" consistent with the usage of the term in this manual consult *AR 35-6700,* Disposition of Property Records. The definition given therein distinguishes clearly between military property accounts and contract property accounts. In the regulation the disposition of military property records is prescribed, and the preservation of contract property and lend-lease property records is directed pending specific instructions.

b. A number of regulations and publications contain valuable information about records of this type. Of the regulations most pertinent for reference purposes are those dealing with property accountability (*AR 35-6520* and *AR-35-6680*); those which constitute procedural directives for the requisitioning of property, supplies, and equipment (*AR 35-6540*); and those which constitute procedural directives for

the receipt, shipment, and issue of property (*AR 35-6560*). War Department Technical Manuals which contain valuable references to supply records are *TM 38-205, TM 38-220, TM 38-403, and TM 38-505.*

c. Policy with respect to transportation records is stated in AR 55-series. Of particular importance among these are *AR 55-150,* Bills of Lading, and *AR 55-175,* Demurrage and Storage. The former governs the procedure for the preparation, disposition, and accomplishment of Government bills of lading. The latter prescribes that a car record book "will be part of the permanent records in the office of the transportation offices" at each post, camp, station, field, or other installation.

8. Medical, Dental, and Veterinary

a. A general guide to medical and clinical records, including (sec. VIII) requirements pertaining to the initiation, routing, and disposition of individual medical records, is available in *AR 40-1025,* Records and Reports of Sick and Wounded. Procedures for handling and disposing of X-ray films are covered in *MR 1-9, WD Circular 147,* 1944, and *section VIII, WD Circular 150,* 1945. Regulations governing the storage and handling of nitrocellulose are stated in *AR 850-65,* Storage and Handling of Nitrocellulose Film in United States Army Establishments.

b. AR 40-1010, Dental Reports, Returns, and Records, constitutes the basic directive pertaining to dental records.

c. Reference should be made to the provisions of *AR 40-2235,* Veterinary Reports, Returns, and Records."

9. Photographic Records

a. Photographic files that are record in character are distinguished from nonrecord photographic files in *AR 345-10,* Military Records —Preservation and Disposition.

b. For data and directives concerning the preparation and maintenance of certain current and historical photographic records and training media, responsibility for which is assigned to the Chief Signal Officer, consult *AR 105-255,* Signal Corps—Photography, and *AR 105-260,* Signal Corps—Training Films and Film Strips.

c. Other useful references to photographic files are *War Department Pamphlet 11-2,* Signal Photography, Standing Operation Procedure for Signal Photographic Units in Theaters of Operations, and *TM 11-409,* Photographic Laboratories, Organization and Operations Service Commands, Departments, and Posts. Additional information as to policy with regard to the disposition of photographic records is contained in Letter *AG 313.3* (5 Aug 44) *OB-S-SPXRM-SPOPP-M.*

10. Security and Intelligence

a. General reference should be made to *AR 380-5,* Safeguarding Military Information.

b. TM 30-218, Counterintelligence Investigation Reports, provides for uniformity of procedures in the preparation of all such reports.

c. Letter *AG 201.3* (6 Apr. 44) *OB-S-B-M,* Transmission of Intelligence Files upon Transfer of Military Personnel, has reference value.

d. For the disposition of individual intelligence files of Government-owned, contractor-operated installations see *section IV, WD Circular 30,* 1945.

11. Postal Records

a. The basic publication for reference to records in this category is *FM 12-105,* The Army Postal Service. This manual gives comprehensive coverage of the procedures of the Army Postal Service, including procedures relevant to the disposition of certain records of the Post Office Department.

12. Repairs and Utilities

a. The basic reference to records of this type is *AR 100-80,* Repairs and Utilities.

b. Other important sources of data for general reference purpose are the following publications of the Corps of Engineers: "Repairs and Utilities Manual," "Cost Accounting Manual," and "Real Estate Manual."

13. T/O Units

The disposition of noncurrent files of T/O units under applicable circumstances is prescribed in *Preparation for Oversea movement* (POM), *Readjustment Regulations 1-2* and *1-6,* and in Inclosure I (Preparation for Intertheater Movements) to Annex B of Letter AG 320.2 (15 Feb 45) *OB-S-E-M.*

INDEX

	Paragraphs	Pages
Adjutant General, The, duties and responsibilities of	4	3
Applicability of manual	2	1
Cemeterial Service Files. (*See* Quartermaster Facilities Files.)		
Civilian Personnel Files:		
Disposal standards for	32	25
Permanent files	29	24
Records depository for	19	13
Retirement of	29–30	24
Special handling of	31	24
Clinical Files, records depository for (*see also* Medical, Dental, and Veterinary Files)	19	13
Contract Files. (*See* Purchasing and Contracting Files.)		
Courier Service Files. (*See* Postal and Courier Service Files.)		
Current Files, defined	3	1
Dental Files. (*See* Medical, Dental, and Veterinary Files.)		
Depository, records. (*See* War Department Records Depository.)		
Depot, records. (*See* Records Depot, and War Department Records Depository.)		
Destruction of records. (*See* Disposal.)		
Disbandment, defined	3	1
Disbursing Officers' Money Accounts, records depository for (*see also* Financial Files)	19	13
Discontinuance, defined	3	1
Disposal:		
Defined	3	1
Methods of	27	22
Reporting on	28	22
Disposal Standards:		
Defined	3	1
General instructions relating to	25–26	20, 21
Specific instructions. (*See under* the functional types of files.)		
Disposition, defined	3	1
Evaluation of Records	13	9
Files, defined	3	1
Financial Files:		
Defined	34	29

	Paragraphs	Pages
Disposal standards for	36	29
Permanent files	35	29
Historical Files	37	31
Inactivated Unit, defined	3	1
Inactive Installation, defined	3	2
Installation:		
Defined	3	1
Duties and responsibilities	8	4
Preparation and submission of schedules	10–11	5, 8
Reporting	28	22
Laundry and Dry Cleaning Operations Files. (*See* Quartermaster Facilities Files.)		
Legal Assistance Files:		
Definition	38	32
Disposal standards for	40	32
Special handling of	39	32
Library Service Files:		
Disposal standards for	42	32
Permanent files	41	32
Loan and Withdrawal of Files from Records Depots and Depositories	22–23	18, 19
Mail and Files Activities Files:		
Disposal standards for	44	33
Permanent files	43	33
Maintenance Files, disposal standards	45	33
Major Command Headquarters:		
Defined	3	1
Duties and responsibilities	6	3
Preparation and submission of schedules	10–11	5, 8
Reporting	28	22
Major Subordinate Command Headquarters:		
Defined	3	1
Duties and responsibilities	7	4
Preparation and submission of schedules	10–11	5, 8
Reporting	28	22
Management and Control Files:		
Disposal standards for	47	34
Permanent files	46	34
Medical, Dental, and Veterinary Files:		
Disposal standards for	50	34

	Paragraphs	Pages
Permanent files	48	34
Special handling of files	49	34
Mess Management Files. (*See* Quartermaster Facilities Files.)		
Military Personnel Files:		
Disposal standards for	52	37
Permanent files	51	37
Records depository for	19	13
Military Training Files:		
Disposal standards for	54	42
Permanent files	53	42
Money Accounts. (*See* Disbursing Officers' Money Accounts.)		
Motor Pool Operations Files:		
Disposal standards for	56	43
Permanent files	55	43
Noncurrent Files, defined	3, 14–15	2, 9, 10
Nonrecord Material, defined	3, 26	2, 21
Organizations. (*See* T/O Units.)		
Oversea Records Depots. (*See* Records Depots.)		
Oversea Theater Files, records depository for	19	13
Oversea Theaters and Commands, defined	3	2
Packing and Shipping Records	20–21	15, 16
Permanent Files. (*See under* the functional type of files.)		
Personnel Files:		
Records depository for	19	13
Shipment of	23	19
Photographic Files:		
Centralization of files	58	43
Described	57	43
Disposal standards for	60	44
Records depository for	19	13
Retirement of	58–59	43, 44
Post Engineer Files. (*See* Repairs and Utilities Files.)		
Postal and Courier Service Files:		
Disposal standards for	62	44
Special handling of	61	44
Procurement Files. (*See* Purchasing and Contracting Files.)		
Property Files. (*See* Supply Files.)		

	Paragraphs	Pages
Public Relations Files:		
Disposal standards for	63	45
Permanent files	64	45
Publications, Reproductions, and Binding Files:		
Disposal standards for	66	46
Permanent files	65	45
Purchasing and Contracting Files:		
Disposal standards for	68	47
Permanent files	67	47
Records depository for	19	13
Purpose of Manual	1	1
Quartermaster Facilities Files:		
Disposal standards for	70	49
Permanent files	69	49
Rationing Operations Files:		
Disposal standards for	72	50
Permanent files	71	50
Records, defined	3	2
Records Administration Program, objective of	1	1
Records Administrators, duties and responsibilities	4–8	3, 4
Records Depot:		
Defined	1	1
Loan and withdrawal of files from	22–23	18, 19
Objectives	16	12
Packing and shipping to	20–21	15, 16
Types	17–18	12
Records Disposition Schedules:		
Preparation	10	5
Purpose	9	5
Submission	11	8
Repairs and Utilities Files:		
Disposal standards for	75	51
Permanent files	73	51
Special handling of	74	51
Reporting on disposal of records	28	22
Research and Development Files	76	53
Retirement of files:		
Defined	3	1
General instructions relating to	24–25	29
Specific instructions. (*See under* the functional types of files.)		
Sale of Records. (*See* Disposal.)		
Sales Commissary Operations Files. (*See* Quartermaster Facilities Files.)		
Schedules. (*See* Records Disposition Schedules.)		
Scope of Manual	2	1

	Paragraphs	Pages
Security and Intelligence Files:		
Disposal standards for	79	53
Permanent files	77	53
Special handling of	78	53
Service Command Records Depots. (*See* Records Depots.)		
Shipping and Storage Box	19–20	13, 15
Shipping Records. (*See* Packing and Shipment of Records.)		
Special Handling of Files:		
General instructions relating to	24–25	20
Specific instructions. (*See under* the functional types of files.)		
Storage Box. (*See* Shipping and Storage Box.)		
Supply Files:		
Disposal standards for	81	54
Permanent files	80	54
T/O Unit:		
Defined	3	1
Records depository for	19	13
Shipment of Files (*see also* Packing and Shipping Records)	19	13
Transfer of records from the Government. (*See* Disposal.)		
Transportation Files:		
Disposal standards for	83	57
Permanent files	82	57
Units. (*See* T/O Units.)		
Veterinary Files. (*See* Medical, Dental, and Veterinary Files.)		
War Department Headquarters Files, records depository for	19	13
War Department Offices:		
Defined	3	1
Duties and responsibilities	5	3
Preparation and submission of schedules	10–11	5, 8
Reporting	28	22
War Department Records Depository:		
Defined	3	1
Loan and withdrawal of files from	22–23	18, 19
Objectives	16	12
Packing and shipping to	20–21	15, 16
Types	17–19	12, 13
Withdrawal of Files from Records Depots or Depositories. (*See* Loan and Withdrawal of Files from Records Depots and Depositories.)		

★ U. S. GOVERNMENT PRINTING OFFICE: 1945—JACKET NO. 657661—TM 273